记号	日期	修 改 记 录

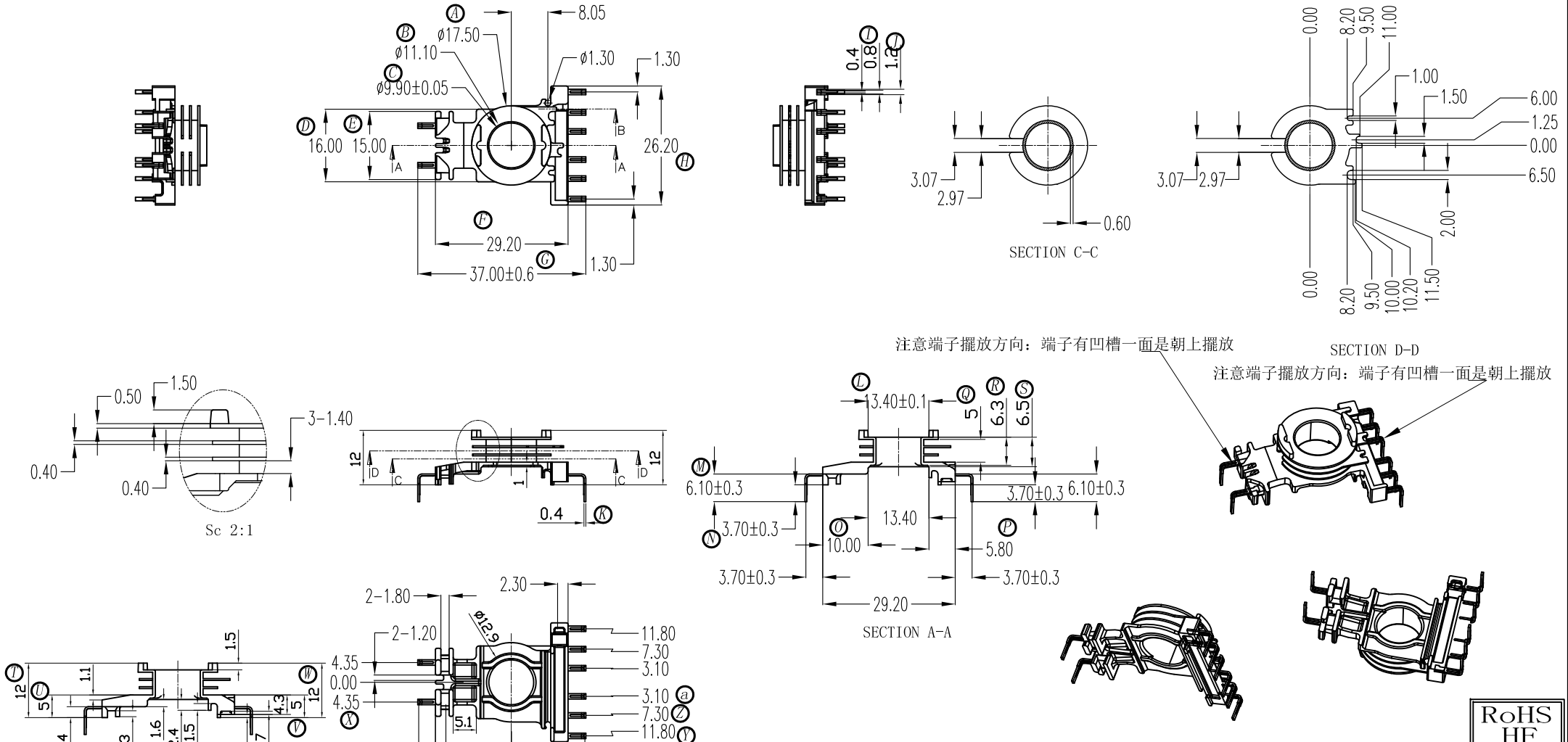

RoHS
HF

NAME	EER2612S-R3(8P)	MATERIAL	LCP-6130	SCALE	1:1	ANGLE	±1°
DRAWING NO.	HX 2622	PIN MATERIAL		UNIT	m/m	REV.	00

东莞市华欣塑胶制品有限公司
DONGGUAN HUAXIN PLASTIC MANUFACTURING PRODUCTS CO.,LTD.
TEL:0769-86388188 FAX:0769-86388111
E-Mail:hxbobbin@vip.163.com

TOLERANCE OF PIN DIA ±0.05

PIN TENSION LOAD 1.0 kg MIN

UL REC. :94V0

TOLERANCE:0<L≤4:±0.1 4<L≤16:±0.2 16<L≤63±0.3

DRAWN & DRAFTED BY	LIN HUA JING	CHECKED & APPROVED BY	LIN GUO PING	DATE:	OCT 18 214