HX-2044

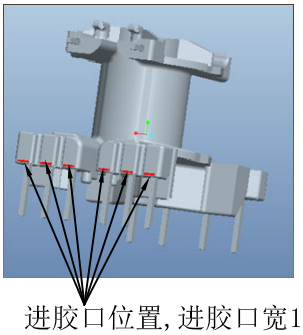

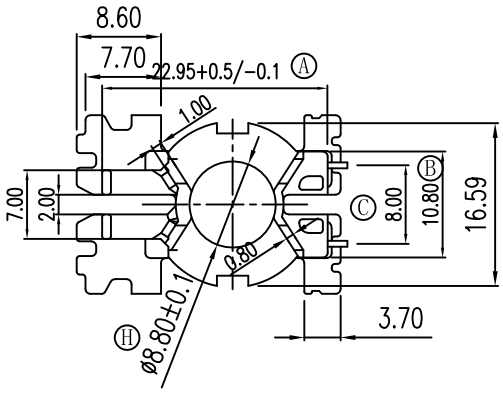

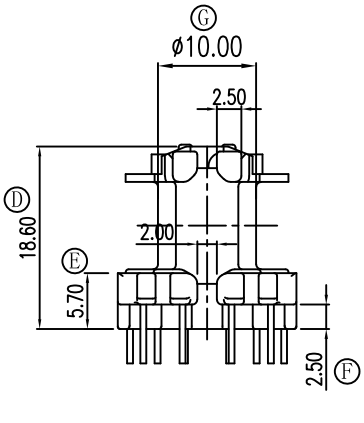

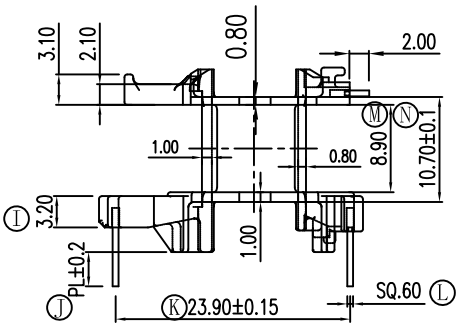

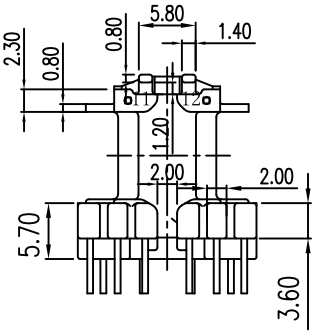

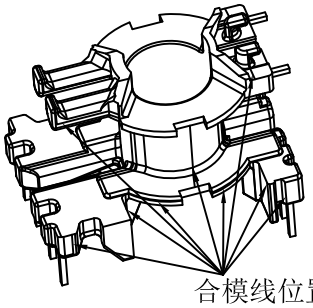

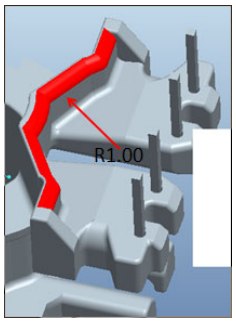

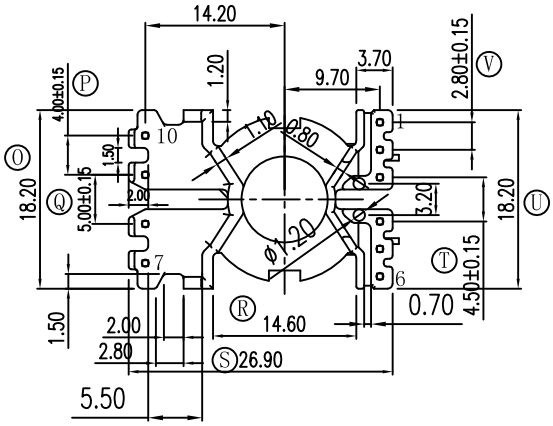

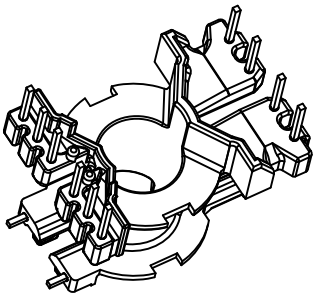

備註說明:

1. 材質: PM-9630
2. 強度要求: 2.00kg MIN
3. 耐壓要求: 4KV/1.5mA/1分鐘
4. 焊錫溫度: 450° ±10° 3SEC
5. 焊錫後拉力: 1.50kg MIN
6. 模具狀況: 量產模
7. 与HX2040共用模具

U	V
18.20	2.80
±0.3	±0.15

A	B	C	D	E	F	G	H	I	J	K	L	M	N	O	P	Q	R	S	T
22.95	10.80	8.00	18.60	5.70	2.50	10.00	8.80	3.20	PL	23.90	0.60	8.90	10.70	18.20	4.00	5.00	14.60	26.90	4.50
+0.5 −0.1	±0.2	±0.2	±0.3	±0.2	±0.1	±0.2	±0.1	±0.1	±0.2	±0.15	±0.05	±0.2	±0.1	±0.3	±0.15	±0.15	±0.2	±0.3	±0.15

客户确认签回

RoHS HF

REV.	REVISION RECORD	DATE	REV	REVISION RECORD	DATE
01	進膠口由頂部改到PIN台BASE位置,4PIN邊BASE擋板加R角1.00	2017/04/10	03		
02			04		

NAME	LQ-2016B(10+2P)	MATERIAL	PM-9630	SCALE	1:1	ANGLE	±1°
DRAWING NO.	HX-2044	PIN MATERIAL	CP WIRE	UNIT	m/m	REV.	01

东莞市华欣塑胶制品有限公司
DONGGUAN HUAXIN PLASTIC MANUFACTURING PRODUCTS CO.,LTD.
TEL:0769-86388088 86388188 86388288 FAX:0769-86388111
http://www.hxbobbin.com E-Mail:hxbobbin@vip.163.com

TOLERANCE OF PIN DIA ±0.05

PIN TENSION LOAD kg MIN

UL REC.:94V0

TOLERANCE: 0<L≤4: ±0.1 4<L≤16: ±0.2 16<L≤63: ±0.3

DRAWN & DRAFTED BY	LIN HUA JING	CHECKED & APPROVED BY		DATE:	MAY 12 2016