HX-2054

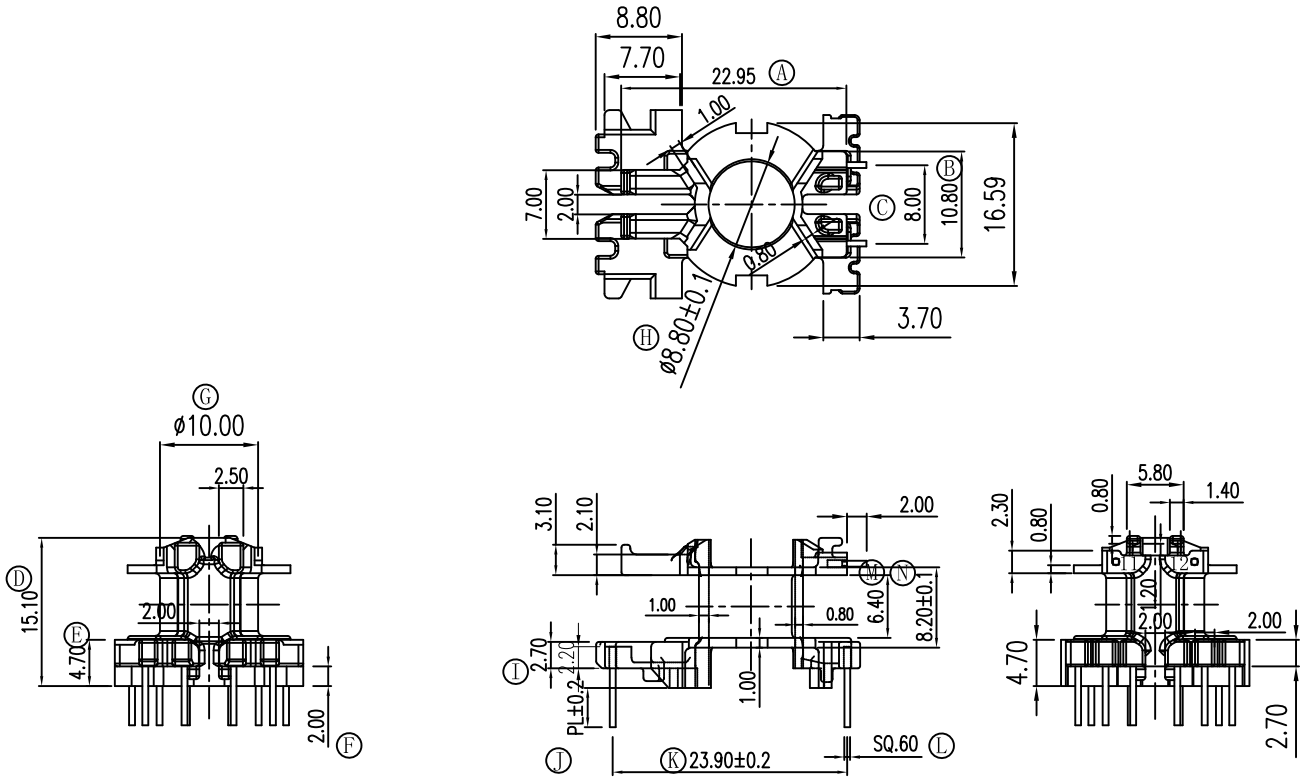

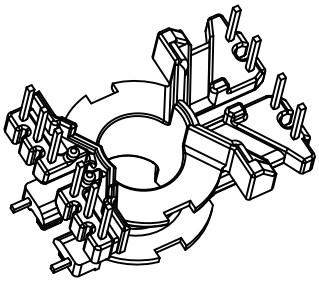

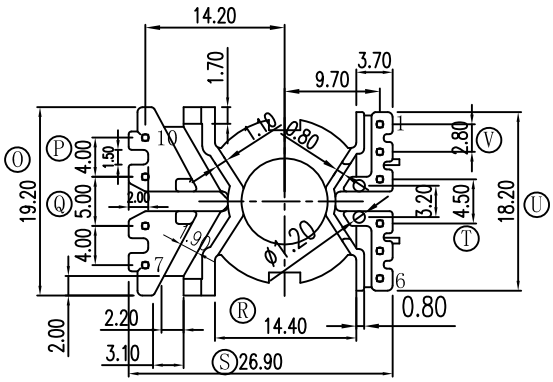

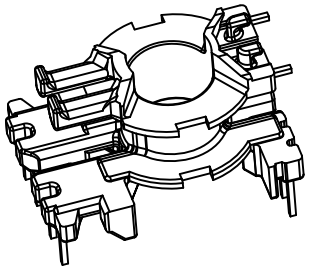

備註說明：

1. 材質：PM-9823
2. 強度要求：1.00kg MIN
3. 耐壓要求：4KV/1.5mA/1分鐘
4. 焊錫溫度：450° ±10° 3SEC
5. 焊錫後拉力：1.50kg MIN
6. 模具狀況：樣品模

客户确认签回	

RoHS HF

REV.	REVISION RECORD	DATE	REV	REVISION RECORD	DATE
01			03		
02			04		

NAME	LQ-2016B(10+2P)	MATERIAL	PM-9823	SCALE	1:1	ANGLE	±1°
DRAWING NO.	HX-2054	PIN MATERIAL	CP WIRE	UNIT	m/m	REV.	00

东莞市华欣塑胶制品有限公司
DONGGUAN HUAXIN PLASTIC MANUFACTURING PRODUCTS CO.,LTD.
TEL:0769-86388088 86388188 86388288 FAX:0769-86388111
http://www.hxbobbin.com E-Mail:hxbobbin@vip.163.com

TOLERANCE OF PIN DIA ±0.05

PIN TENSION LOAD kg MIN

UL REC.:94V0

TOLERANCE: 0<L≤4: ±0.1 4<L≤16: ±0.2 16<L≤63: ±0.3

DRAWN & DRAFTED BY	LIN HUA JING	CHECKED & APPROVED BY		DATE:	JUL 27 2017