# HX-4007

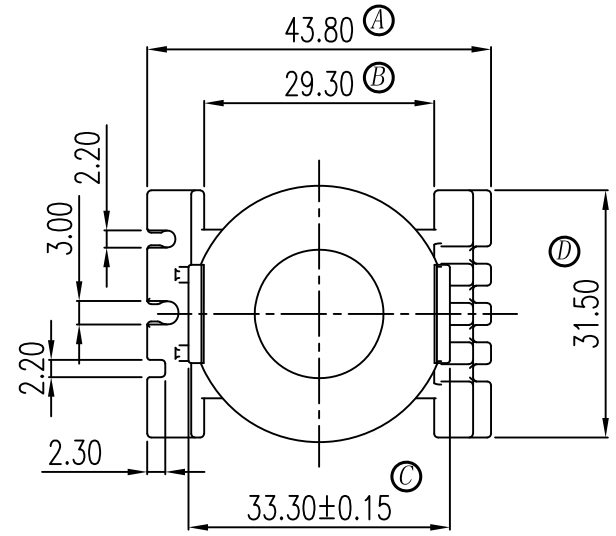


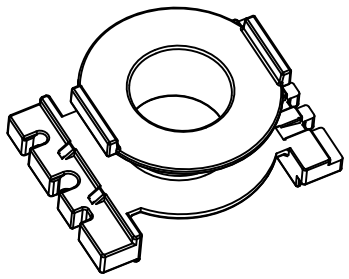

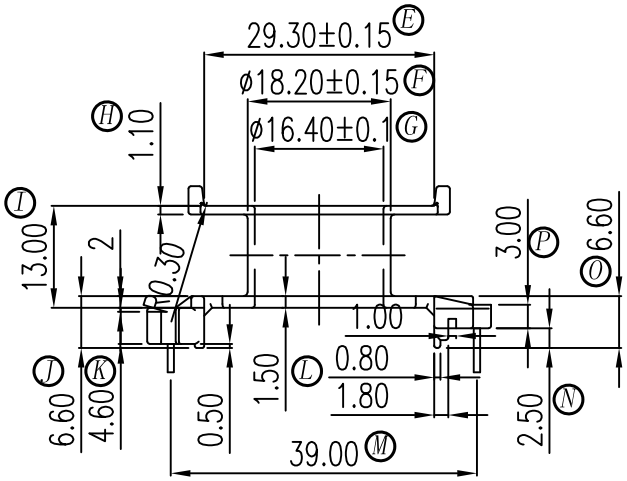


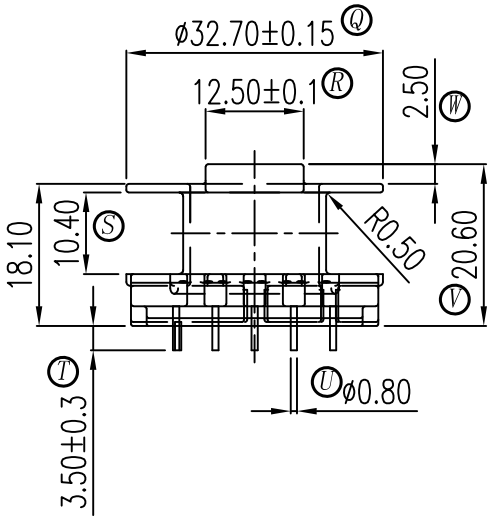


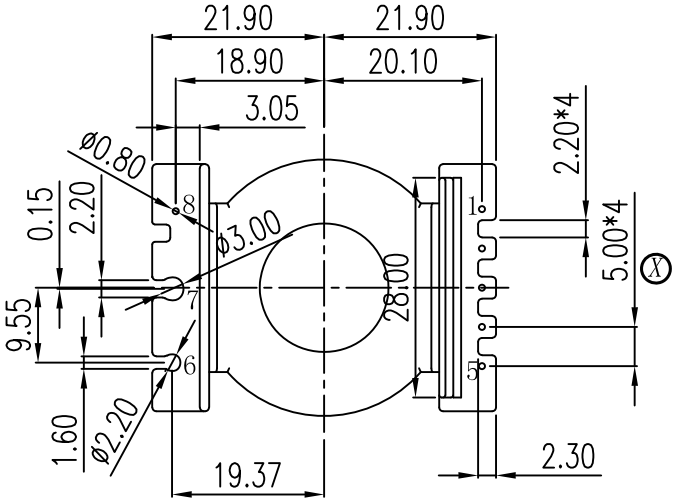


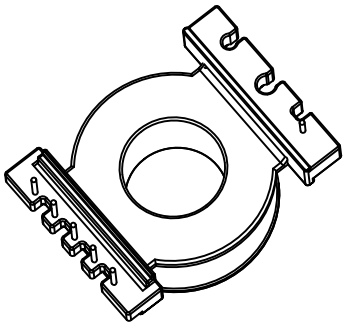

| 客户确认签回 | | RoHS HF |
|---|---|---|

| REV. | REVISION RECORD | DATE | REV | REVISION RECORD | DATE |
|---|---|---|---|---|---|
| 01 | | | 03 | | |
| 02 | | | 04 | | |

| NAME | CC-4021(6P) | MATERIAL | PM-9820 | SCALE | 1:1 | ANGLE | ±1° |
|---|---|---|---|---|---|---|---|
| DRAWING NO. | HX 4007 | PIN MATERIAL | CP WIRE | UNIT | m/m | REV. | 00 |


东莞市华欣塑胶制品有限公司
DONGGUAN HUAXIN PLASTIC MANUFACTURING PRODUCTS CO.,LTD.
TEL:0769-86388088 86388188 86388288 FAX:0769-86388111
http://www.hxbobbin.com E-Mail:hxbobbin@vip.163.com


TOLERANCE OF PIN DIA ±0.05

PIN TENSION LOAD 1.0 kg MIN — UL REC.:94V0

TOLERANCE: 0<L≤4: ±0.1  4<L≤16: ±0.2  16<L≤63: ±0.3

| DRAWN & DRAFTED BY | LIN HUA JING | CHECKED & APPROVED BY | | DATE: | JUN 07 2010 |
|---|---|---|---|---|---|