HX-4507A

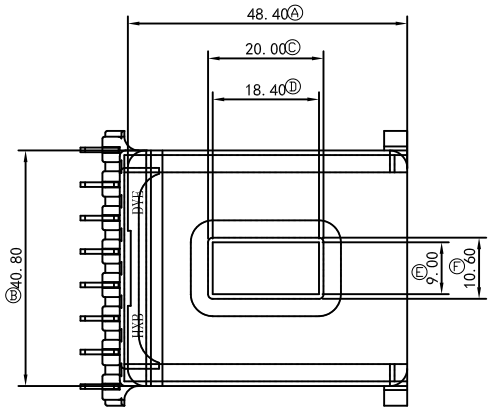

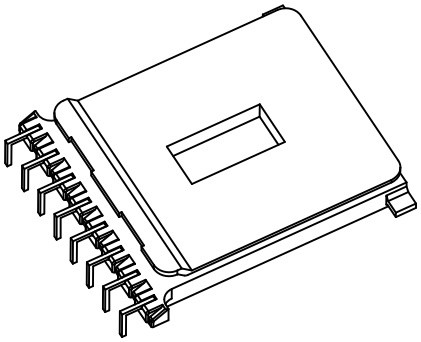

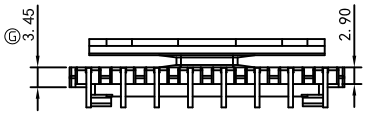

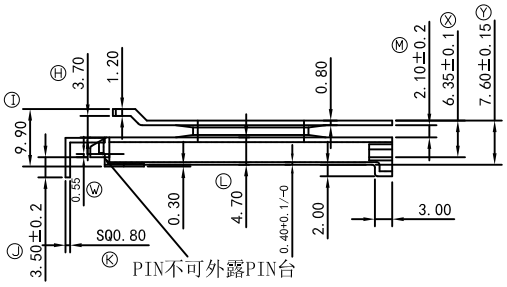

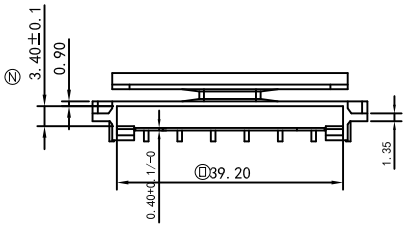

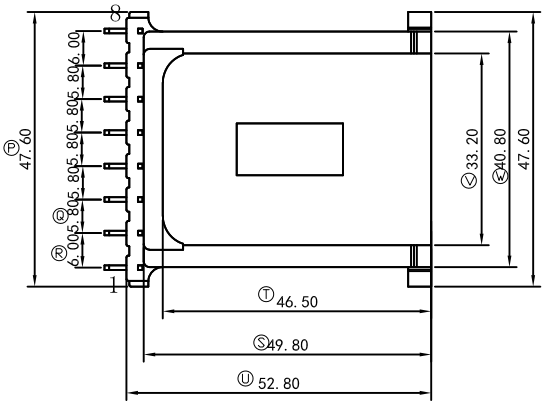

此4個凸點平貼度0.20mm MAX

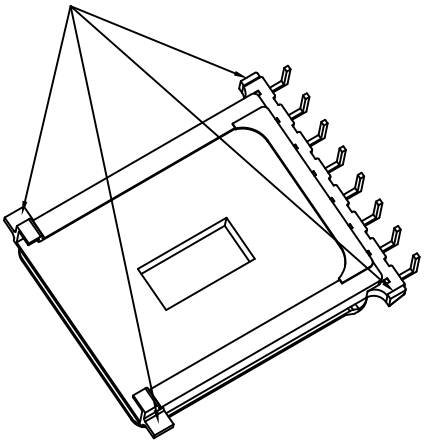

客户确认签回		RoHS HF

REV.	REVISION RECORD	DATE	REV	REVISION RECORD	DATE
01	H尺寸4.00改為3.85;I尺寸10.50改為10.20;L尺寸5.00改為4.85;M尺寸2.40改為2.25;N尺寸3.70改為3.55	2020/09/16	03	G尺寸3.25改为3.45;L尺寸4.85改为4.70;M尺寸2.25改为2.10;W尺寸0.35改为0.55; X尺寸6.30改为6.50;Y尺寸7.90改为7.60;N尺寸3.55改为3.40;	2020/11/26
02	G尺寸3.40改為3.25;W尺寸0.50改為0.35;X尺寸6.45改为6.30;	2020/09/23	04		

NAME	EED-4612V(8P)	MATERIAL	PM-9820	SCALE	1:1	ANGLE	±1°
DRAWING NO.	HX 4507A	PIN MATERIAL	CP WIRE	UNIT	m/m	REV.	03

东莞市华欣塑胶制品有限公司
DONGGUAN HUAXIN PLASTIC MANUFACTURING PRODUCTS CO.,LTD.
TEL:0769-86388088 86388188 86388288 FAX:0769-86388111
http://www.hxbobbin.com E-Mail:hxbobbin@vip.163.com

TOLERANCE OF PIN DIA ±0.05

PIN TENSION LOAD 0.6 kg MIN — UL REC.:94V0

TOLERANCE:0<L≤4:±0.1 4<L≤16:±0.2 16<L≤63:±0.3

DRAWN & DRAFTED BY	LIN HUA JING	CHECKED & APPROVED BY		DATE:	AUG 22 2020