HX-4608A

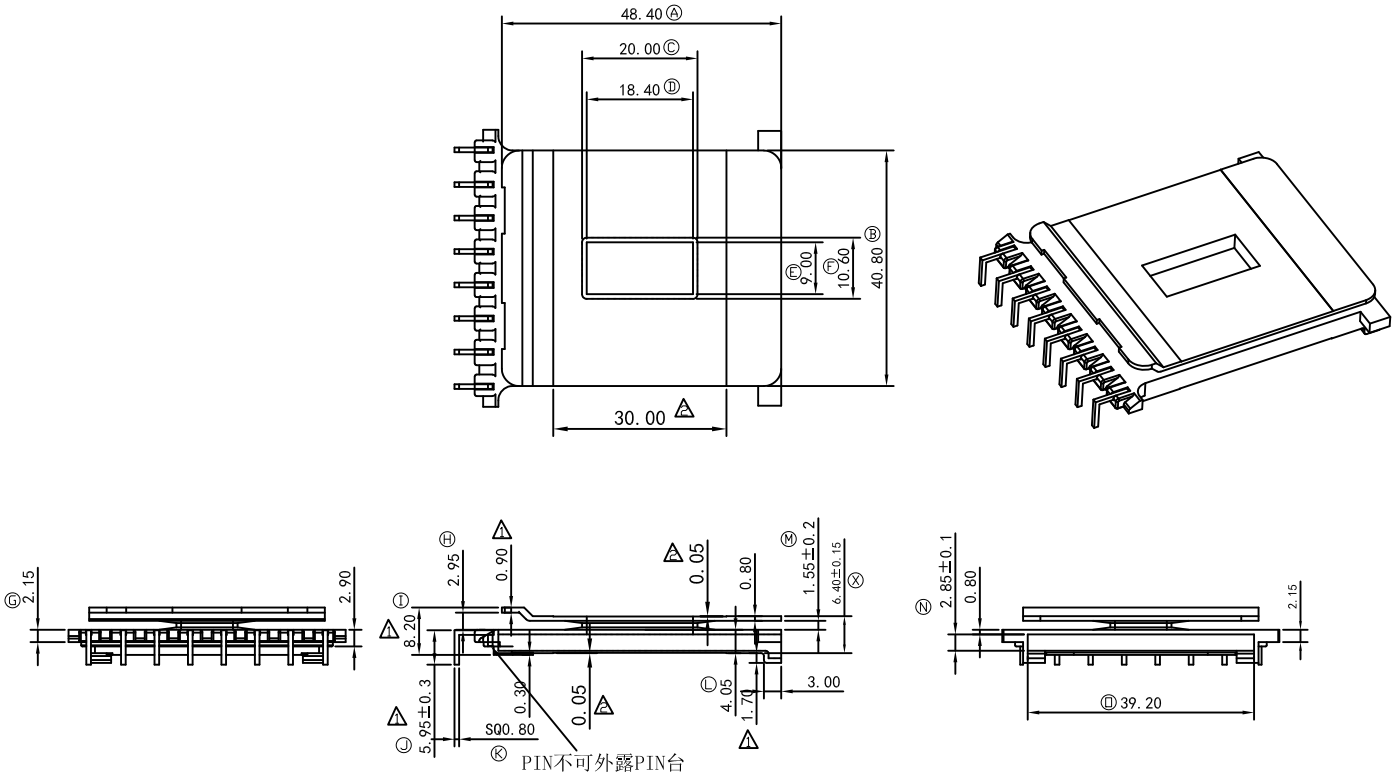

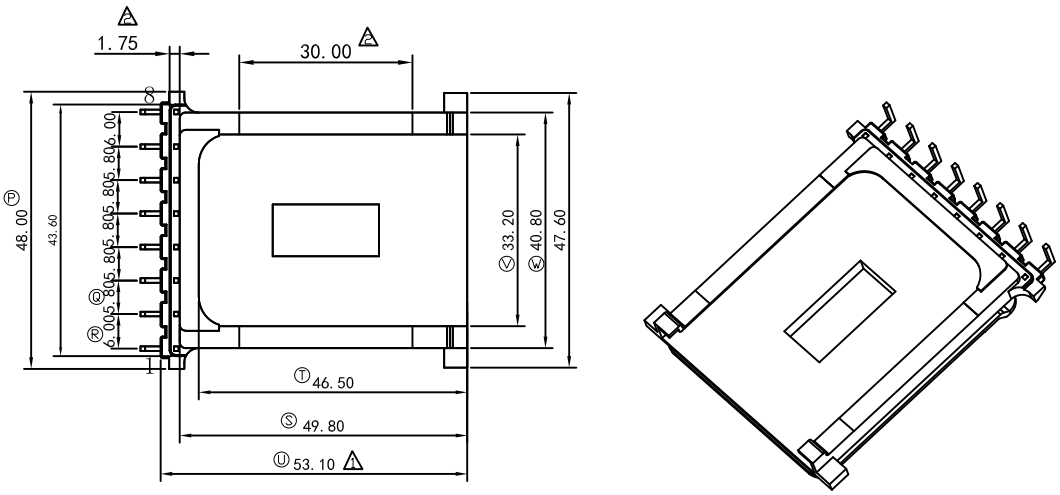

量產模

客户确认签回		RoHS HF

REV.	REVISION RECORD	DATE	REV	REVISION RECORD	DATE
01	△1 I尺寸由8.5改為8.2;J尺寸由5.45改為5.95;U尺寸由52.8改為53.1 尺寸1.2改為0.9;尺寸2.0改為1.7	2023/08/29	03		
02	△2 尺寸由1.95改為1.75;上下葉片增加修改尺寸30.00; 0.05台階	2023/09/07	04		

NAME	EED-4610(8P)	MATERIAL	PM-9820	SCALE	1:1	ANGLE	±1°
DRAWING NO.	HX 4608A	PIN MATERIAL	CP WIRE	UNIT	m/m	REV.	02

东莞市华欣塑胶制品有限公司
DONGGUAN HUAXIN PLASTIC MANUFACTURING PRODUCTS CO.,LTD.
TEL:0769-86388088 86388188 86388288 FAX:0769-86388111
http://www.hxbobbin.com E-Mail:hxbobbin@vip.163.com

TOLERANCE OF PIN DIA ±0.05

PIN TENSION LOAD 0.6 kg MIN

UL REC.:94V0

TOLERANCE:0<L≤4:±0.1 4<L≤16:±0.2 16<L≤63:±0.3

DRAWN & DRAFTED BY	LIN HUA JING	CHECKED & APPROVED BY		DATE:	JUL 27 2023