HX-3032A

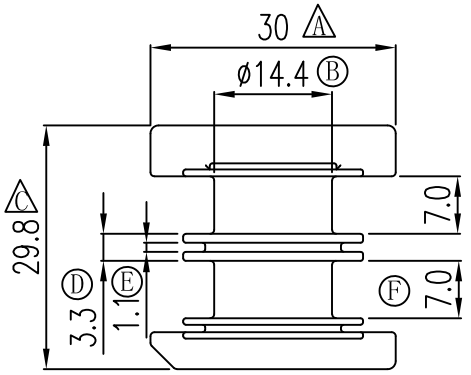

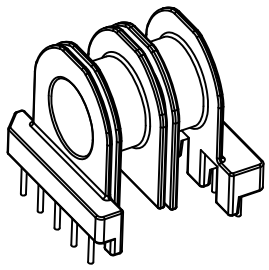

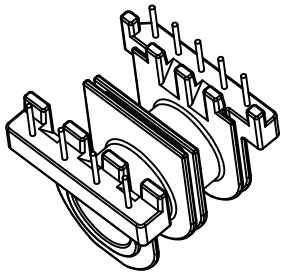

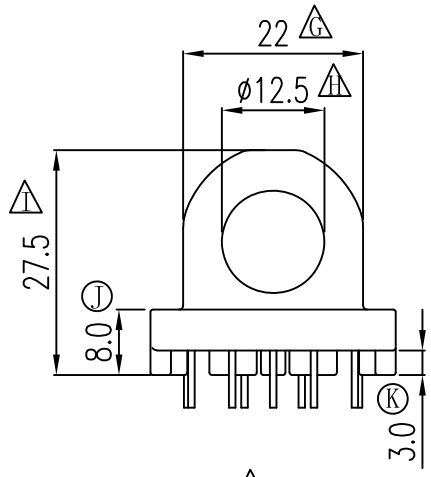

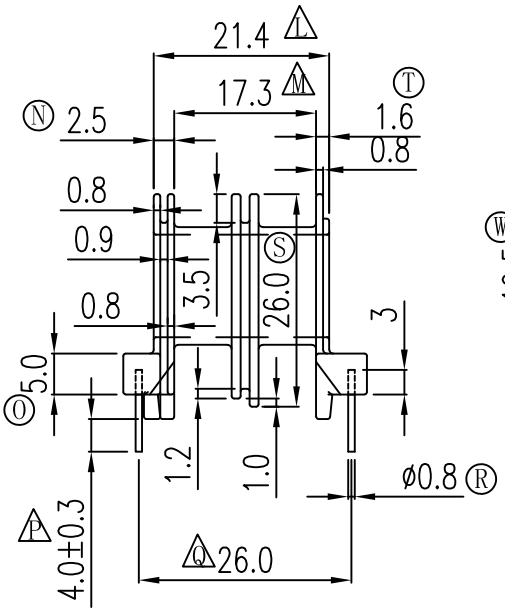

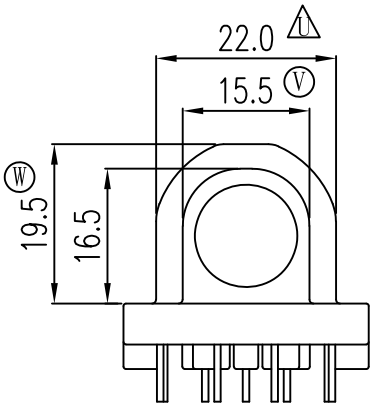

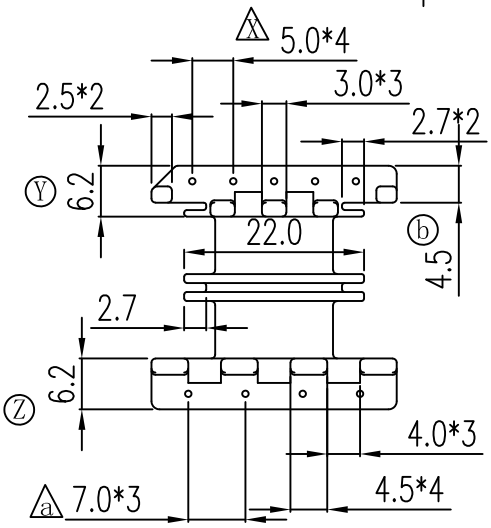

备註說明：

1. PART NO.: HX-3032A 樣品模
2. MATERIAL: PM-9820 MUST MEET UL94V-0
3. COLOR: BLACK
4. CORE TYPE: EER-3030C
5. MATERIAL OF PIN : 3/4H CP WIRE, □0.80±0.05
6. DIMENSION MARK : A MAIN DIM., X SECOND DIM, OTHERWIRE ARE REFERENTIAL DIM..
   标示的 A 为重要尺寸，标示的 X 为次要尺寸。
7. 強度要求：1.50kg MIN
8. 耐壓要求：4KV/1.5mA/1分鐘
9. 焊錫溫度：450° ±10° 3SEC
10. 拉力：焊後拉力 1.5kg MIN
11. HX-3032A與HX-3032B裝配OK

客户确认	
签回	

RoHS HF

REV.	REVISION RECORD	DATE	REV	REVISION RECORD	DATE
01			03		
02			04		

NAME	EER-3030C(9P)	MATERIAL	PM-9820	SCALE	1/1	ANGLE	±1°
DRAWING NO.	HX-3032A	PIN MATERIAL	CP WIRE	UNIT	m/m	REV.	00

东莞市华欣塑胶制品有限公司
DONGGUAN HUAXIN PLASTIC MANUFACTURING PRODUCTS CO.,LTD.
TEL:0769-86388088 86388188 86388288 FAX:0769-86388111
http://www.hxbobbin.com E-Mail:hxbobbin@vip.163.com

TOLERANCE OF PIN DIA ±0.05

PIN TENSION LOAD 1.5 kg MIN

UL REC.:94V0

TOLERANCE: 0<L≤4: ±0.1 4<L≤16: ±0.2 16<L≤63: ±0.3

DRAWN & DRAFTED BY	LIN HUA JING	CHECKED & APPROVED BY		DATE:	JAN 08 2014