HX-3827A

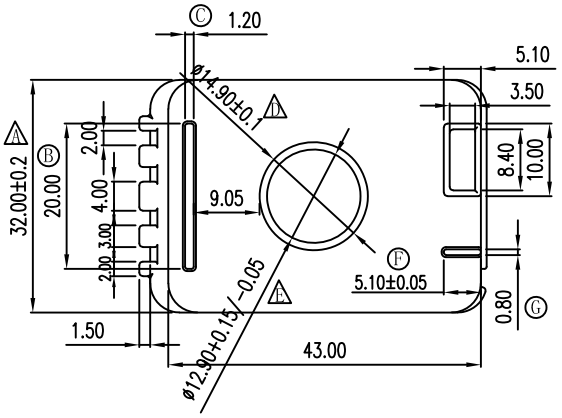

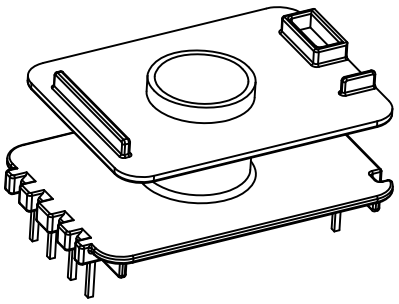

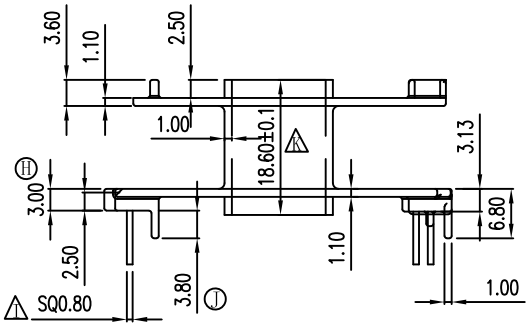

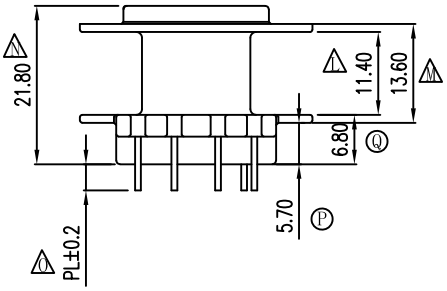

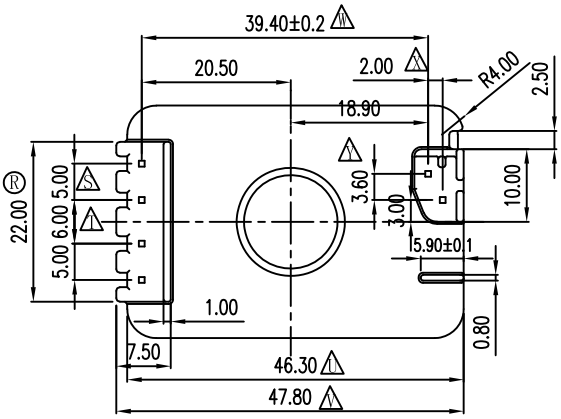

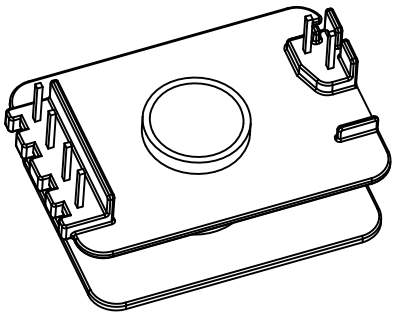

備註說明：

1. PART NO.: HX-3827A
2. MATERIAL: PM-9820 MUST MEET UL94V-0
3. COLOR: BLACK
4. CORE TYPE: EER-3824
5. MATERIAL OF PIN : 3/4H CP WIRE, SQ0.80±0.05
6. DIMENSION MARK : △ MAIN DIM., Ⓧ SECOND DIM, OTHERWIRE ARE REFERENTIAL DIM..
   标示的 △ 为重要尺寸，标示的 Ⓧ 为次要尺寸。
7. 強度要求：2.00kg MIN
8. 耐壓要求：4KV/1.5mA/1分鐘
9. 模具狀況：量產模

V	W	X	Y
47.80	39.40	2.00	3.60
±0.3	±0.2	±0.1	±0.1

客户确认签回

RoHS HF

A	B	C	D	E	F	G	H	I	J	K	L	M	N	O	P	Q	R	S	T	U
32.00	20.00	1.20	14.90	12.90	5.10	0.80	3.00	0.80	3.80	18.60	11.40	13.60	21.80	PL	5.70	6.80	22.00	5.00	6.00	46.30
±0.2	±0.3	±0.1	±0.1	+0.15 -0.05	±0.05	±0.1	±0.1	±0.05	±0.1	±0.1	±0.2	±0.2	±0.3	±0.2	±0.2	±0.2	±0.2	±0.2	±0.2	±0.3

REV.	REVISION RECORD	DATE	REV	REVISION RECORD	DATE
01			03		
02			04		

NAME	EER-3824(4+2P)	MATERIAL	PM-9820	SCALE	1:1	ANGLE	±1°
DRAWING NO.	HX-3827A	PIN MATERIAL	CP WIRE	UNIT	m/m	REV.	00

东莞市华欣塑胶制品有限公司
DONGGUAN HUAXIN PLASTIC MANUFACTURING PRODUCTS CO.,LTD.
TEL:0769-86388088 86388188 86388288 FAX:0769-86388111
http://www.hxbobbin.com E-Mail:hxbobbin@vip.163.com

TOLERANCE OF PIN DIA ±0.05

UL REC.:94V0

TOLERANCE: 0<L≤4: ±0.1 4<L≤16: ±0.2 16<L≤63: ±0.3

DRAWN & DRAFTED BY	LIN HUA JING	CHECKED & APPROVED BY		DATE:	APR 15 2017