| 记号 | 日期 | 修 改 记 录 |
|---|---|---|
| 1 | 2014/11/04 | BASE侧面凸點厚度1.20改為1.40，加厚0.20mm |
| | | |

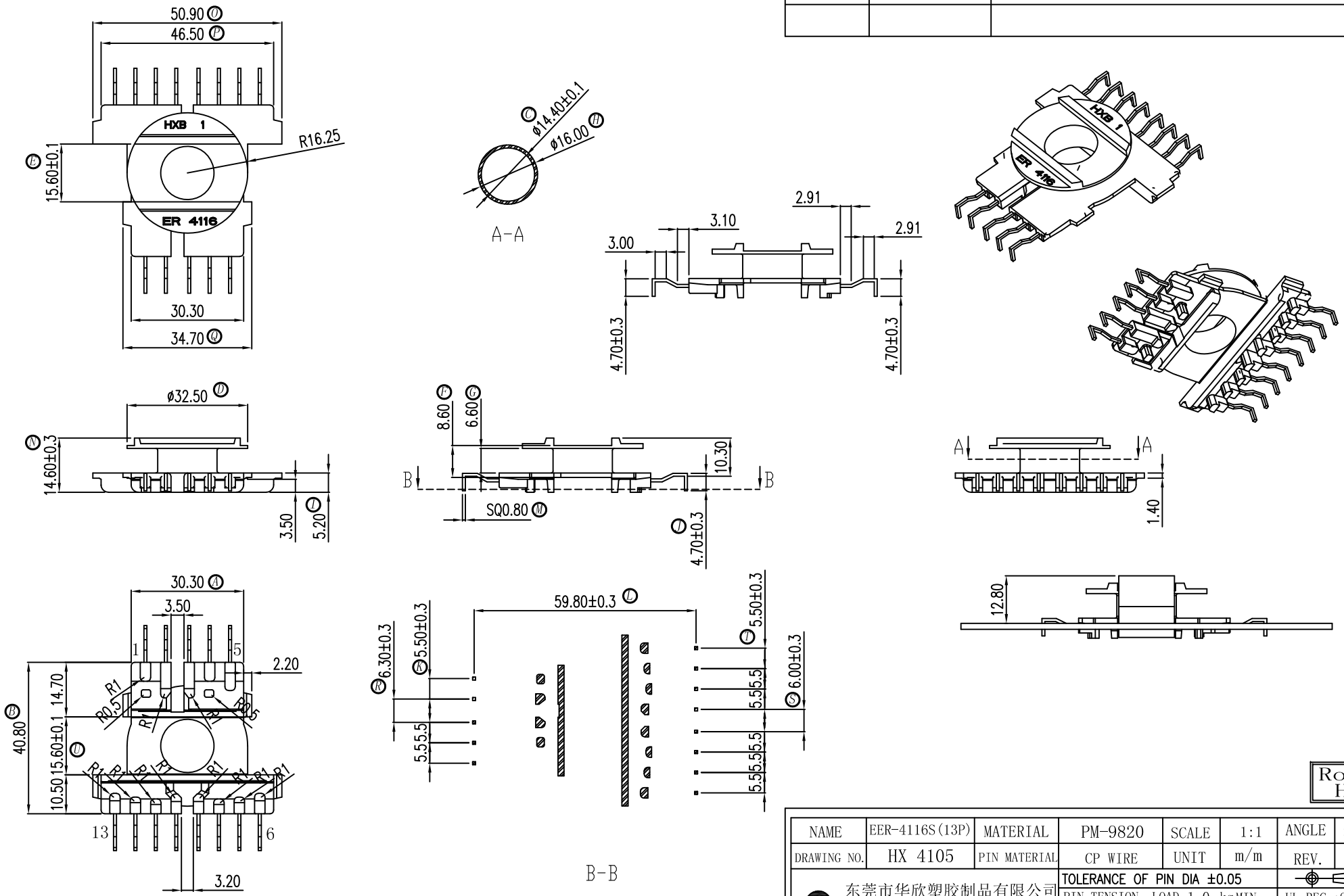


RoHS
HF

| NAME | EER-4116S(13P) | MATERIAL | PM-9820 | SCALE | 1:1 | ANGLE | ±1° |
|---|---|---|---|---|---|---|---|
| DRAWING NO. | HX 4105 | PIN MATERIAL | CP WIRE | UNIT | m/m | REV. | 01 |


东莞市华欣塑胶制品有限公司
DONGGUAN HUAXIN PLASTIC MANUFACTURING PRODUCTS CO.,LTD.
TEL:0769-86388188 FAX:0769-86388111
E-Mail:hxbobbin@vip.163.com


TOLERANCE OF PIN DIA ±0.05

PIN TENSION LOAD 1.0 kg MIN

UL REC. :94V0

TOLERANCE:0<L≤4:±0.1 4<L≤16:±0.2 16<L≤63±0.3

| DRAWN & DRAFTED BY | LIN HUA JING | CHECKED & APPROVED BY | LIN GUO PING | DATE: | NOV 30 2012 |
|---|---|---|---|---|---|