记号	日期	修 改 记 录

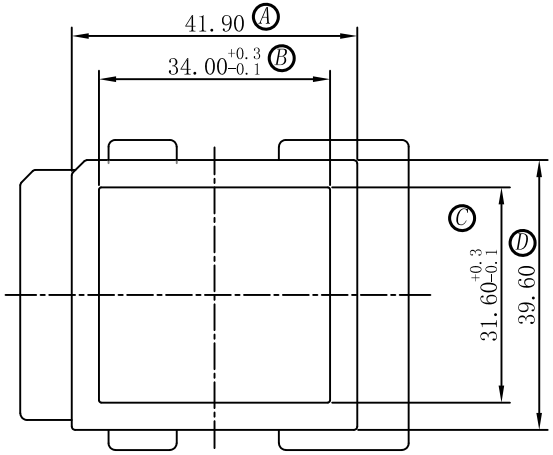

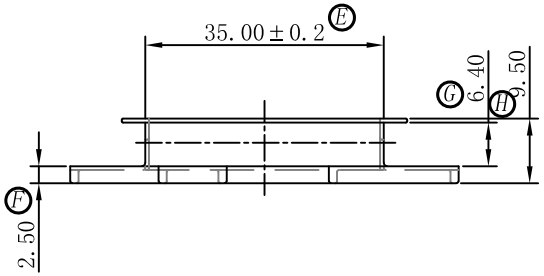

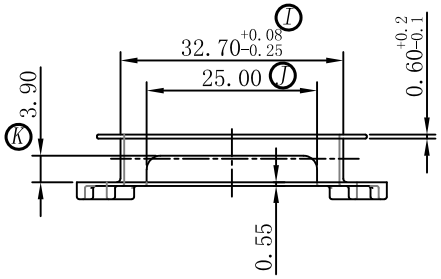

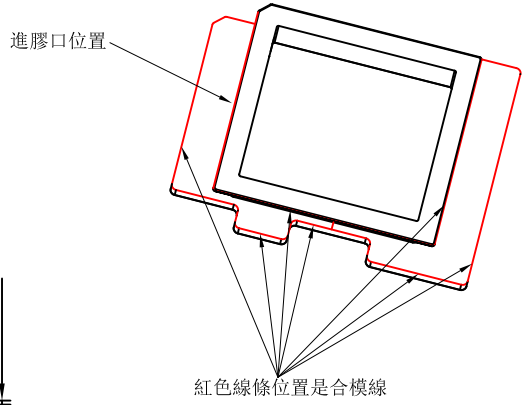

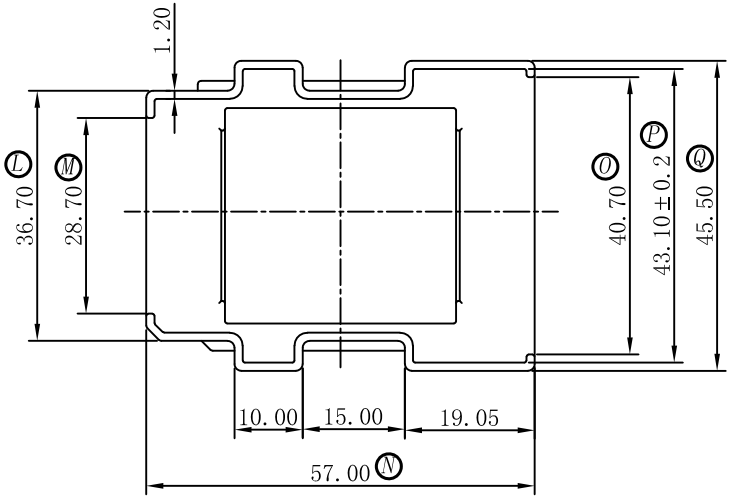

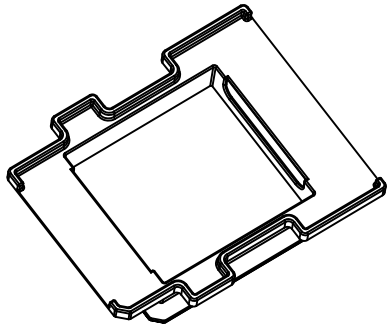

備註說明:

1. 材質：PET-FR530
2. 強度要求：1.50kg MIN
3. 耐壓要求：4KV/1.5mA/1分鐘
4. 模具狀況：量產模

RoHS

NAME	EFD-4549 CAP	MATERIAL	PET-FR530	SCALE	1:1	ANGLE	±1°
DRAWING NO.	HX-4503B	PIN MATERIAL		UNIT	m/m	REV.	00
东莞市华欣塑胶制品有限公司 DONGGUAN HUAXIN PLASTIC MANUFACTURING PRODUCTS CO.,LTD. TEL:0769-86388088 86388188 86388288 FAX:0769-86388111 http://www.hxbobbin.com E-Mail:hxbobbin@vip.163.com			PIN TENSION LOAD kg MIN			UL REC. :94V0	
			TOLERANCE: 0<L≤4: ±0.1	4<L≤16: ±0.2		16<L≤63: ±0.3	
			DRAWN & DRAFTED BY	LIN HUA JING	CHECKED & APPROVED BY	LIN GUO PING	DATE: NOV 03 2010