记号	日期	修 改 记 录

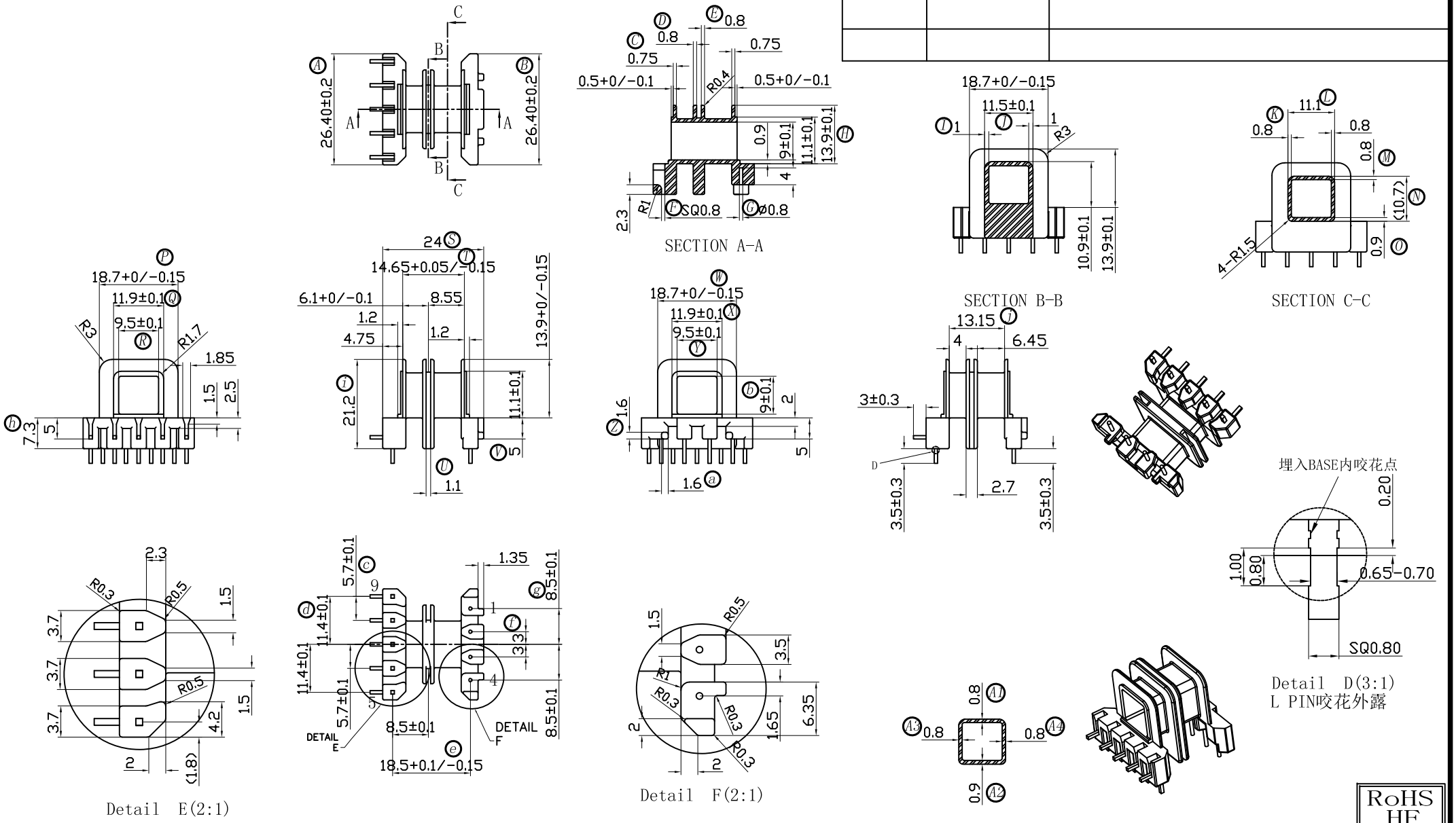

注:

1. PIN NO 1-4脚:ø0.80mm
2. PIN NO 5-9脚:Square Type Pin(方0.80mmx0.80mm)
3. TOLERANCES:(尺寸公差)

	X.X
0<L<=4	±0.1
4<L<=16	±0.15
16<L<=63	±0.2
63<L<=250	±0.3

RoHS
HF

NAME	EM-28(9P)	MATERIAL	PM-9820	SCALE	1:1	ANGLE	±1°
DRAWING NO.	HX 2846A	PIN MATERIAL	CP WIRE	UNIT	m/m	REV.	00

东莞市华欣塑胶制品有限公司
DONGGUAN HUAXIN PLASTIC MANUFACTURING PRODUCTS CO.,LTD.
TEL:0769-86388188 FAX:0769-86388111
E-Mail:hxbobbin@vip.163.com

TOLERANCE OF PIN DIA ±0.05

PIN TENSION LOAD 2.0 kg MIN

UL REC.:94V0

TOLERANCE:

DRAWN & DRAFTED BY	LIN HUA JING	CHECKED & APPROVED BY	LIN GUO PING	DATE:	DEC 10 2010