HX-2861A

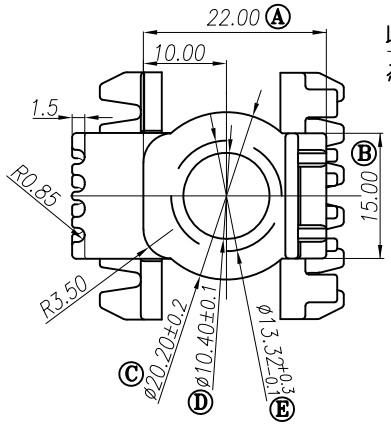

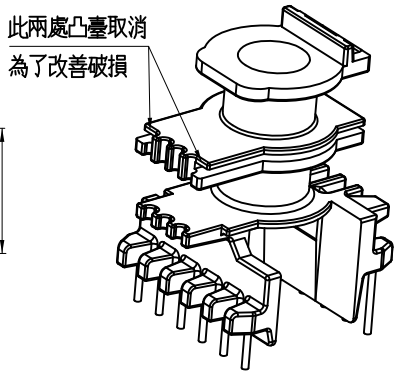

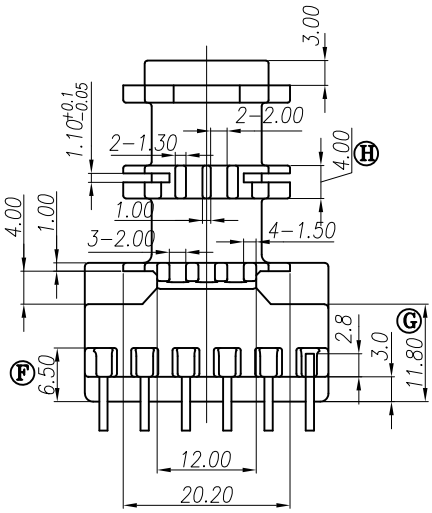

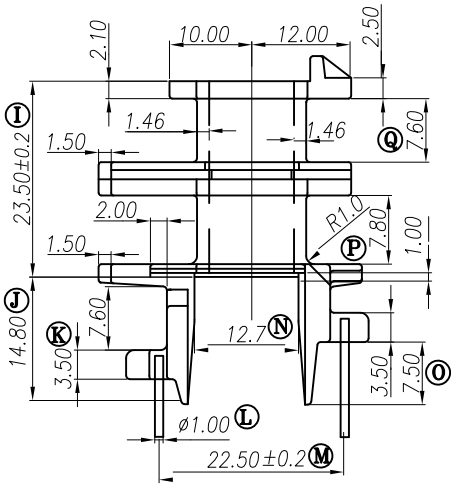

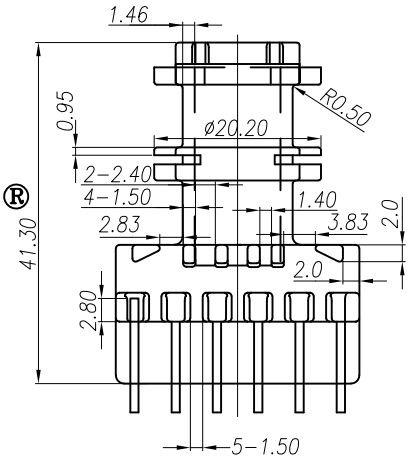

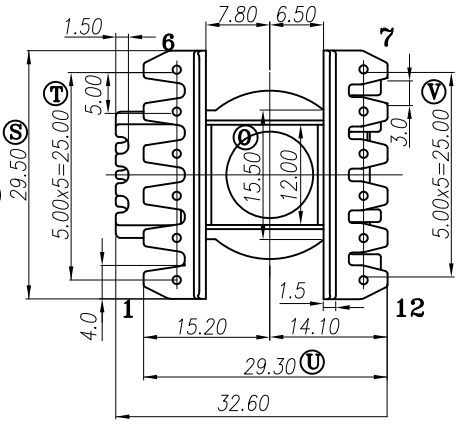

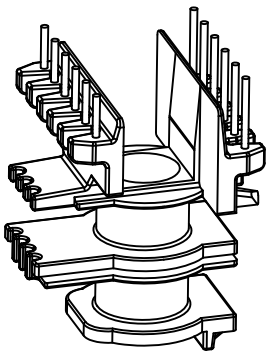

備註說明：

1. PART NO.: HX-2861A 量产模
2. MATERIAL: PM-9630 MUST MEET UL94V-0
3. COLOR: BLACK
4. CORE TYPE: ER-28
5. 強度要求：2.00kg MIN
6. 耐壓要求：4KV/1.5mA/1分鐘
7. 焊錫溫度：450° ±10° 3SEC
8. 拉力：焊後拉力 2.50kg MIN
9. HX-2861A與HX-2861B裝配OK

U	V
29.30	5.00
±0.3	±0.2

A	B	C	D	E	F	G	H	I	J	K	L	M	N	O	P	Q	R	S	T
22.00	15.00	20.20	10.40	13.32	6.50	11.80	4.00	23.50	14.80	3.50	1.00	22.50	12.70	7.50	7.90	7.60	41.30	29.50	5.00
±0.3	±0.2	±0.2	±0.1	+0.3 -0.1	±0.2	±0.2	±0.1	±0.2	±0.2	±0.1	±0.05	±0.2	±0.2	±0.2	±0.2	±0.2	±0.3	±0.3	±0.2

客户确认 签回

RoHS HF

REV.	REVISION RECORD	DATE	REV	REVISION RECORD	DATE
01			03		
02			04		

NAME	ER-28(14P)	MATERIAL	PM-9630	SCALE	1:1	ANGLE	±1°
DRAWING NO.	HX-2861A	PIN MATERIAL	CP WIRE	UNIT	m/m	REV.	00

东莞市华欣塑胶制品有限公司
DONGGUAN HUAXIN PLASTIC MANUFACTURING PRODUCTS CO.,LTD.
TEL:0769-86388088 86388188 86388288 FAX:0769-86388111
http://www.hxbobbin.com E-Mail:hxbobbin@vip.163.com

TOLERANCE OF PIN DIA ±0.05

PIN TENSION LOAD 2.0 kg MIN

UL REC.:94V0

TOLERANCE: 0<L≤4: ±0.1 4<L≤16: ±0.2 16<L≤63: ±0.3

DRAWN & DRAFTED BY	LIN HUA JING	CHECKED & APPROVED BY		DATE:	OCT 15 2016