记号	日期	修 改 记 录

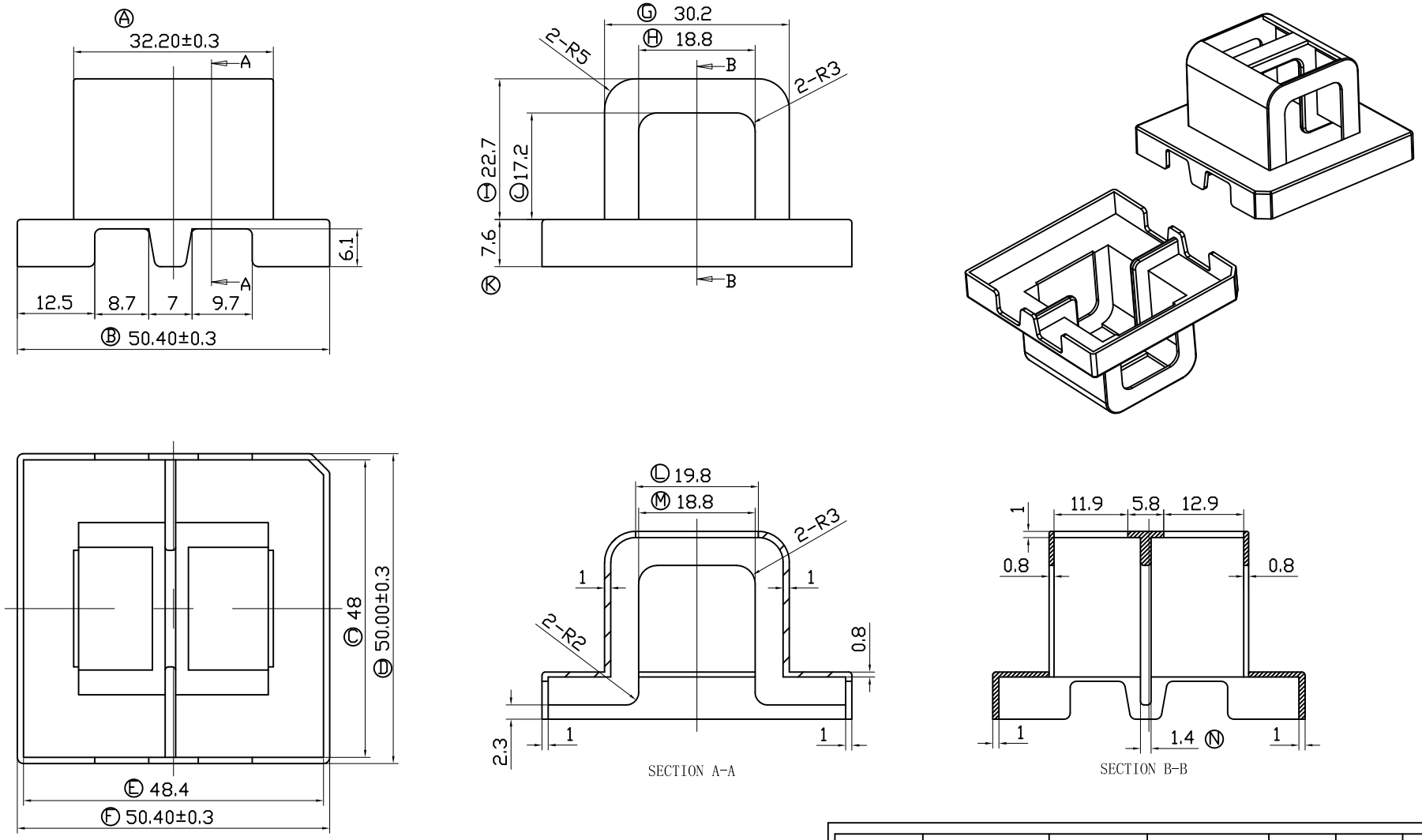

RoHS

NAME	ETD-44 CAP	MATERIAL	PET-FR530	SCALE	1:1	ANGLE	±1°
DRAWING NO.	HX 4402B	PIN MATERIAL		UNIT	m/m	REV.	00

东莞市华欣塑胶制品有限公司
DONGGUAN HUAXIN PLASTIC MANUFACTURING PRODUCTS CO.,LTD.
TEL:0769-86388088 86388188 86388288 FAX:0769-86388111
http://www.hxbobbin.com E-Mail:hxbobbin@vip.163.com

TOLERANCE OF PIN PITCH ±0.20

PIN TENSION LOAD kg MIN

UL REC. :94V0

TOLERANCE: 0<L≤4: ±0.1 4<L≤16: ±0.2 16<L≤63: ±0.3

DRAWN & DRAFTED BY	LIN HUA JING	CHECKED & APPROVED BY	LIN GUO PING	DATE:	NOV 17 2007