HX-2551A

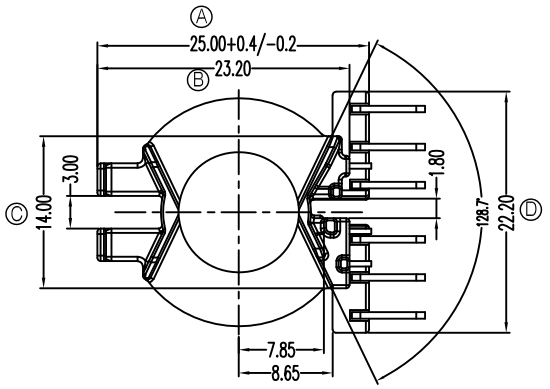

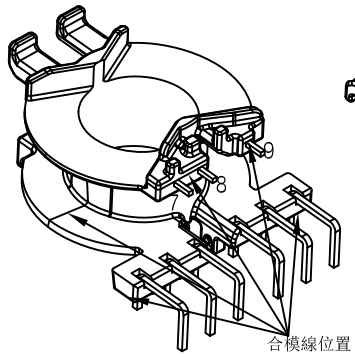

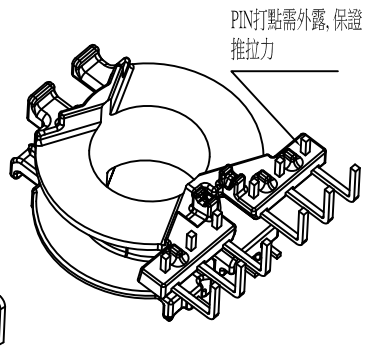

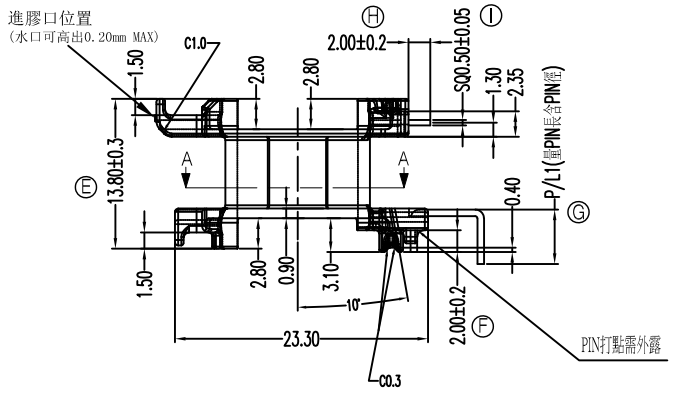

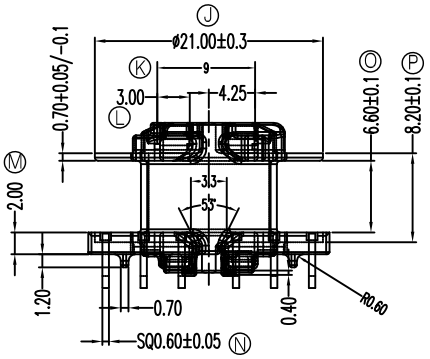

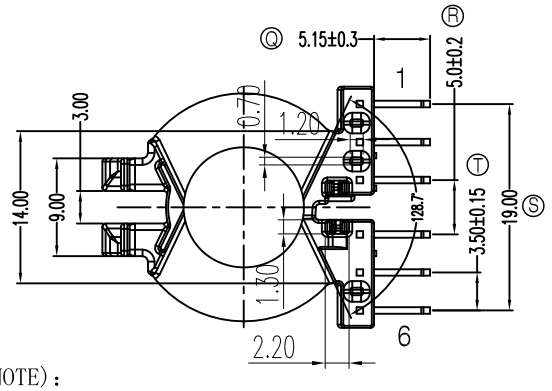

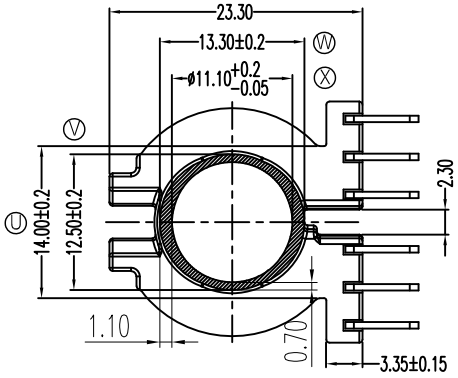

SECTION A-A

備註(NOTE):

1. 材質(Material): PM-9823
2. 強度要求(Strength reguirement): 1.50kg MIN,
3. 耐壓要求(HI-POT requirements): 4KV/1.5mA/1Min
4. 焊錫溫度(Soldering temperature): 450° ±10° 3SEC
5. 拉力(Pull): 焊前拉力1.0kg MIN,焊後拉力 1.50kg MIN
6. 模具狀況(The mould status): 量產模(Formal mold)
7. 與HX-2551B匹配OK

R	S	T	U	V	W	X
5.00	19.00	3.50	14.00	12.50	13.30	11.10
±0.2	±0.3	±0.15	±0.2	±0.3	±0.2	+0.2 -0.05

A	B	C	D	E	F	G	H	I	J	K	L	M	N	O	P	Q
25.00	23.20	14.00	22.20	13.80	2.00	PL1	2.00	0.50	21.00	9.00	3.00	2.00	0.60	6.60	8.20	5.15
+0.4 -0.2	±0.3	±0.2	±0.3	±0.3	±0.2	±0.2	±0.2	±0.05	±0.3	±0.2	±0.1	±0.1	±0.05	±0.1	±0.1	±0.3

客户确认 签回

RoHS HF

REV.	REVISION RECORD	DATE	REV	REVISION RECORD	DATE
01			03		
02			04		

NAME	LQ-25-14.3(6+3P)	MATERIAL	PM-9823	SCALE	1:1	ANGLE	±1°
DRAWING NO.	HX-2551A	PIN MATERIAL	CP WIRE	UNIT	m/m	REV.	01

东莞市华欣塑胶制品有限公司
DONGGUAN HUAXIN PLASTIC MANUFACTURING PRODUCTS CO.,LTD.
TEL:0769-86388088 86388188 86388288 FAX:0769-86388111
http://www.hxbobbin.com E-Mail:hxbobbin@vip.163.com

TOLERANCE OF PIN DIA ±0.05

PIN TENSION LOAD kg MIN

UL REC.:94V0

TOLERANCE: 0<L≤4: ±0.1 4<L≤16: ±0.2 16<L≤63: ±0.3

DRAWN & DRAFTED BY	LIN HUA JING	CHECKED & APPROVED BY		DATE:	MAY 05 2018