# HX-2620B

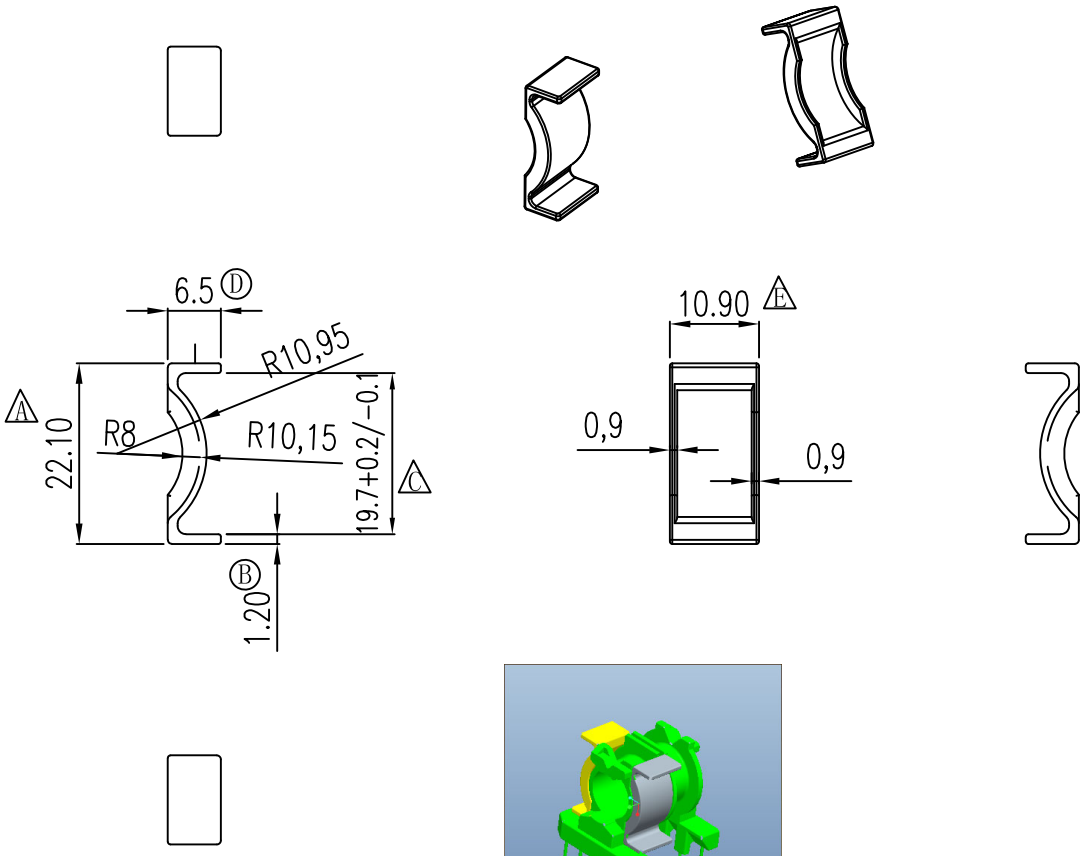


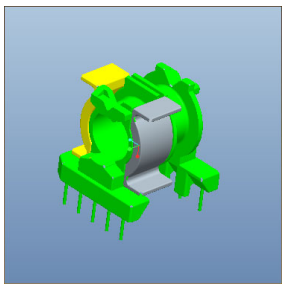

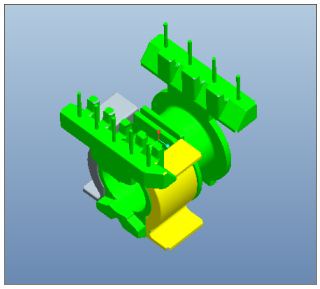

备註說明：

1. PART NO.: HX-2620B 樣品模
2. MATERIAL: PM-9820 MUST MEET UL94V-0
3. COLOR: BLACK
4. CORE TYPE: PQ-2630
5. MATERIAL OF PIN :
6. DIMENSION MARK : A MAIN DIM., X SECOND DIM, OTHERWIRE ARE REFERENTIAL DIM..
   标示的 A 为重要尺寸，标示的 X 为次要尺寸。
7. 強度要求：1.30kg MIN
8. 耐壓要求：4KV/1.5mA/1分鐘
9. 焊錫溫度：450° ±10° 3SEC
10. HX-2620A與HX-2620B裝配OK

| 客户确认签回 | |
|---|---|

RoHS HF

| REV. | REVISION RECORD | DATE | REV | REVISION RECORD | DATE |
|---|---|---|---|---|---|
| 01 | | | 03 | | |
| 02 | | | 04 | | |

| NAME | PQ-2630 CAP | MATERIAL | PM-9820 | SCALE | 1:1 | ANGLE | ±1° |
|---|---|---|---|---|---|---|---|
| DRAWING NO. | HX-2620B | PIN MATERIAL | | UNIT | m/m | REV. | 00 |


东莞市华欣塑胶制品有限公司
DONGGUAN HUAXIN PLASTIC MANUFACTURING PRODUCTS CO.,LTD.
TEL:0769-86388088 86388188 86388288 FAX:0769-86388111
http://www.hxbobbin.com E-Mail:hxbobbin@vip.163.com


TOLERANCE OF PIN DIA ±0.05

PIN TENSION LOAD kg MIN

UL REC.:94V0

TOLERANCE: 0<L≤4: ±0.1 4<L≤16: ±0.2 16<L≤63: ±0.3

| DRAWN & DRAFTED BY | LIN HUA JING | CHECKED & APPROVED BY | | DATE: | DEC 12 2013 |
|---|---|---|---|---|---|