HX-3250

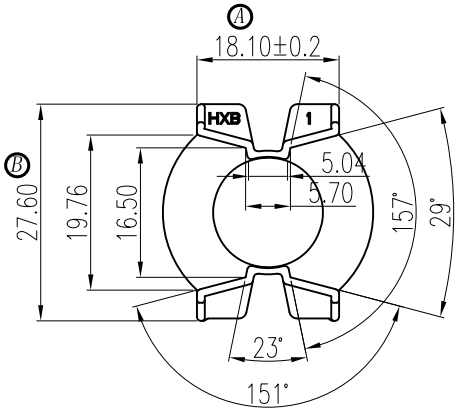

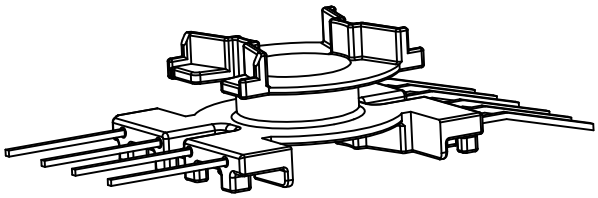

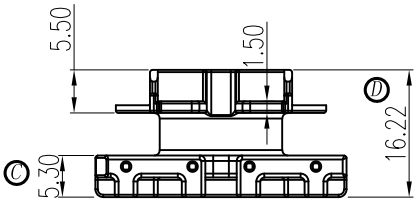

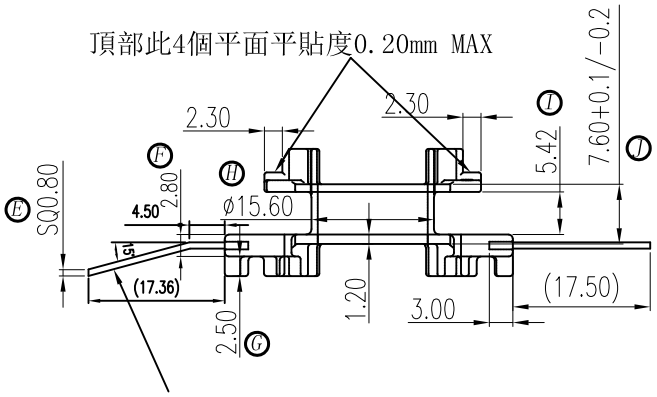

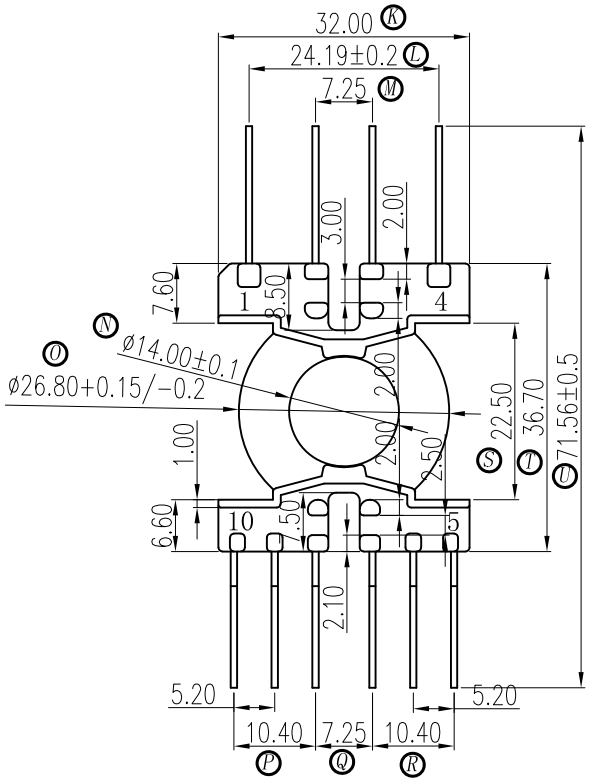

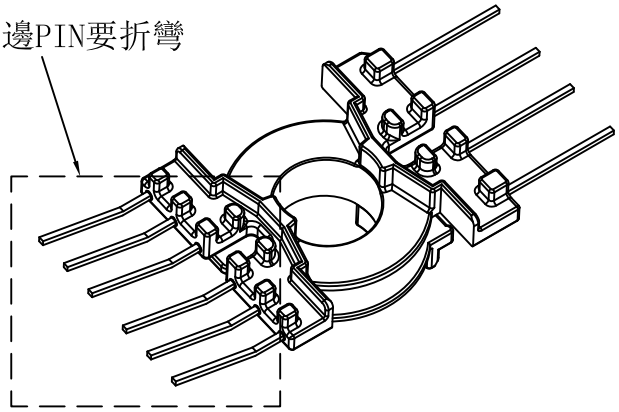

備註說明：

1. HX3250與HX3242共用半成品本體
2. 兩者只是插PIN沖壓不同

A	B	C	D	E	F	G	H	I	J	K	L	M	N	O	P	Q	R	S	T	U
18.10	27.60	5.30	16.22	0.80	2.80	2.50	15.60	5.42	7.60	32.00	24.19	7.25	14.00	26.80	10.40	7.25	10.40	22.50	36.70	71.56
±0.2	±0.3	±0.2	±0.3	±0.05	±0.1	±0.1	±0.2	±0.2	+0.1 -0.2	±0.3	±0.2	±0.2	±0.1	+0.15 -0.2	±0.2	±0.2	±0.2	±0.3	±0.3	±0.5

客户确认签回

RoHS HF

REV.	REVISION RECORD	DATE	REV	REVISION RECORD	DATE
01			03		
02			04		

NAME	PQ-3217(10P)	MATERIAL	PM-9820	SCALE	1:1	ANGLE	±1°
DRAWING NO.	HX-3250	PIN MATERIAL	CP WIRE	UNIT	m/m	REV.	00

东莞市华欣塑胶制品有限公司
DONGGUAN HUAXIN PLASTIC MANUFACTURING PRODUCTS CO.,LTD.
TEL:0769-86388088 86388188 86388288 FAX:0769-86388111
http://www.hxbobbin.com E-Mail:hxbobbin@vip.163.com

TOLERANCE OF PIN DIA ±0.05

PIN TENSION LOAD 1.5 kg MIN

UL REC.:94V0

TOLERANCE: 0<L≤4: ±0.1 4<L≤16: ±0.2 16<L≤63: ±0.3

DRAWN & DRAFTED BY	LIN HUA JING	CHECKED & APPROVED BY		DATE:	JUN 01 2020