记号	日期	修改记录
1	2010/06/10	A,C,H,I尺寸由5.80,5.80,1.10,14.70改为6.30,6.30,1.60,15.7
2	2013/02/28	F,G尺寸由5.7,2.0改为6.2,2.50
3	2023/05/25	F,H尺寸由6.2,1.6改为6.4,1.8

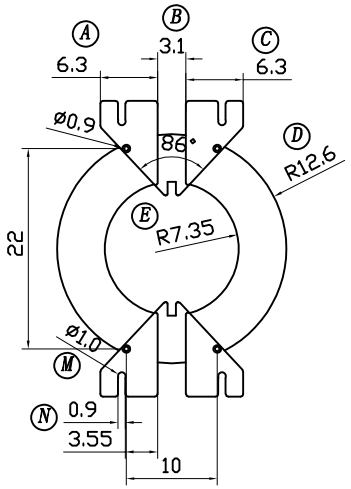

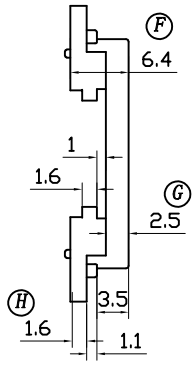

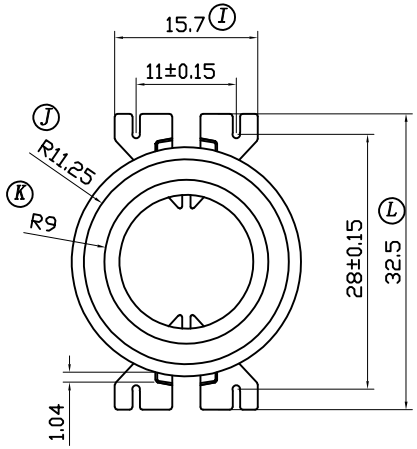

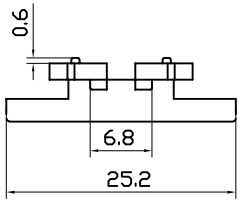

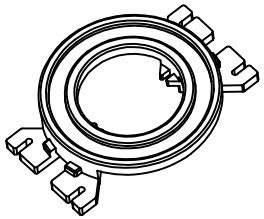

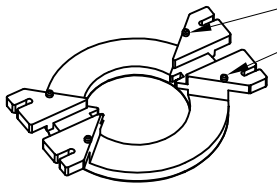

NOTE:

1. 此BASE最小壁厚是：0.75mm MIN
2. BASE面4個小凸點平整度是0.10mm MAX

RoHS

NAME	T25X15X6 BASE	MATERIAL	PBT-1403G6	SCALE	1:1	ANGLE	±1°
DRAWING NO.	HX C011D	PIN MATERIAL		UNIT	m/m	REV.	03

东莞市华欣塑胶制品有限公司
DONGGUAN HUAXIN PLASTIC MANUFACTURING PRODUCTS CO.,LTD.
TEL:0769-86388188 FAX:0769-86388111
E-Mail:hxbobbin@vip.163.com

TOLERANCE OF PIN PITCH ±0.20

PIN TENSION LOAD kg MIN

UL REC. :94V0

TOLERANCE:0<L≤4:±0.1 4<L≤16:±0.2 16<L≤...:±0.3

DRAWN & DRAFTED BY	LIN HUA JING	CHECKED & APPROVED BY	LIN GUO PING	DATE:	JUN 04 20