版本	日期	修 改 记 录
01	2022/03/09	有帶 1 符號位置尺寸變更修改
02		
03		
04		

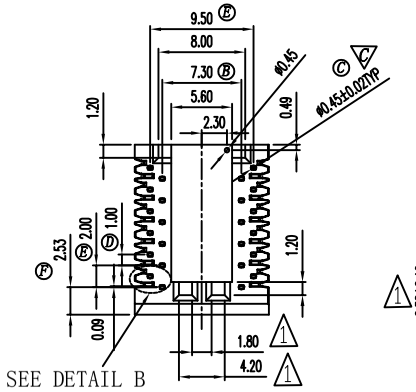

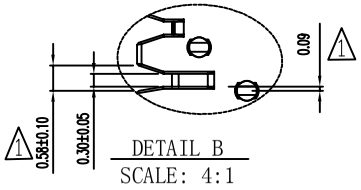

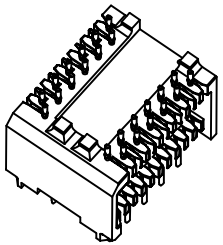

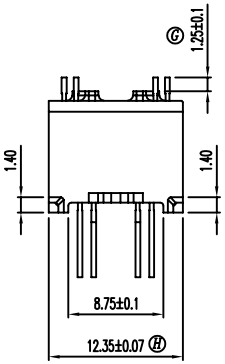

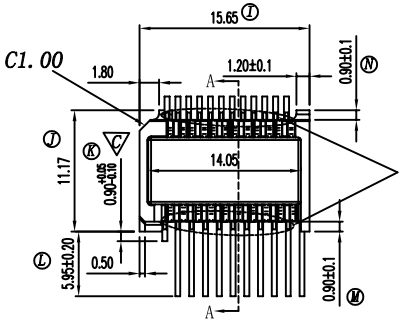

注：PIN咬花外露點不可超過凸點最高面

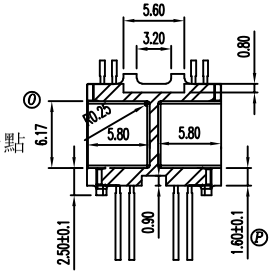

SEC TION A-A

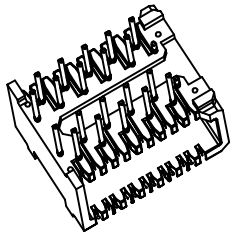

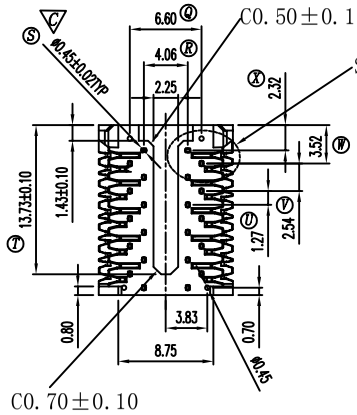

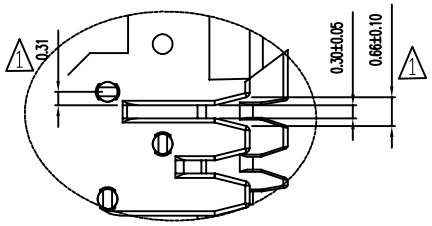

NOTES:UNLESS OTHERWISE SPECIFIED.

1. THE MAXIMUM ALLOWABLL CUT-OFF BURR TO BE 0.10MM.
2. DIMENSIONS MARKED C TO BE CHECKED BY Q.C AND PROCESS ENGINEERS.
3. HARMFUL MATERIAL CONTROL FOLLOW DOC NO.EP112
4. ROUND PIN RETENTION FORCE:0.4kgf MINIMUM.

RoHS HF

NAME	030-00F3-432_HX3	MATERIAL	PM-9823	SCALE	1:1	ANGLE	±1°
DRAWING NO.	HX C026	PIN MATERIAL	PB 磷青銅線	UNIT	m/m	REV.	01

东莞市华欣塑胶制品有限公司
DONGGUAN HUAXIN PLASTIC MANUFACTURING PRODUCTS CO.,LTD.
TEL:0769-86388088 86388188 86388288 FAX:0769-86388111
http://www.hxbobbin.com E-Mail:hxbobbin@vip.163.com

TOLERANCE OF PIN PITCH ±0.20
PIN TENSION LOAD 0.4 kgMIN
UL REC. :94V0
TOLERANCE:0<L≤4:±0.1 4<L≤16:±0.2 16<L≤63:±0.3

DRAWN & DRAFTED BY	LIN HUA JING	CHECKED & APPROVED BY		DATE:	DEC 24 202