HX-0826

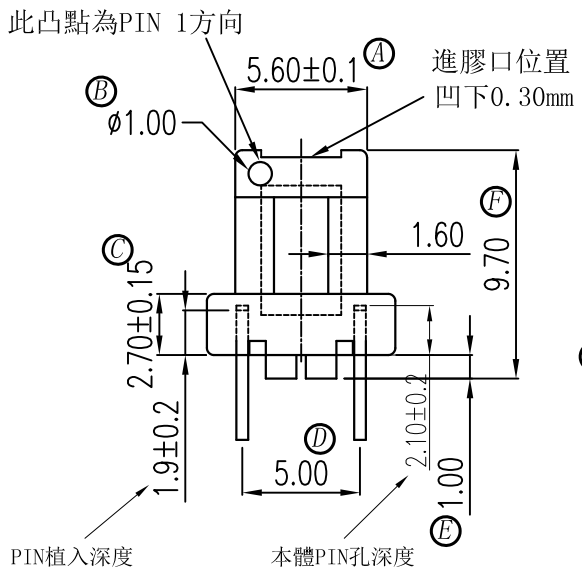

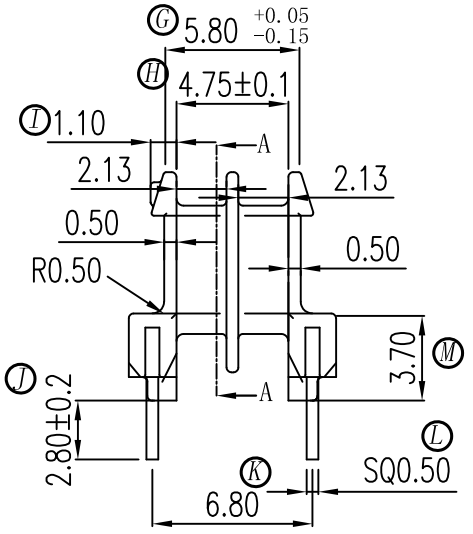

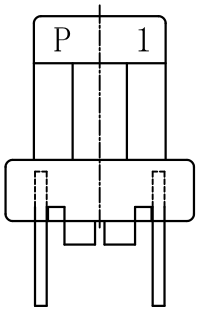

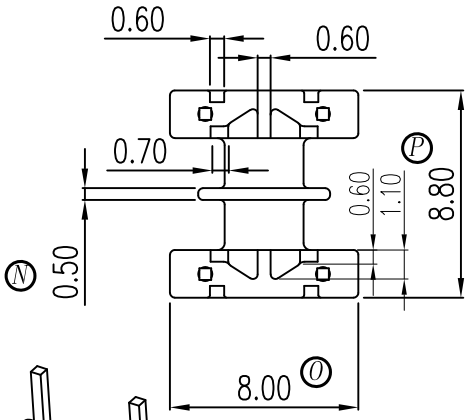

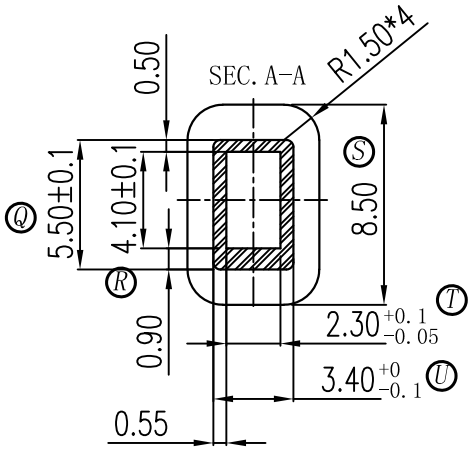

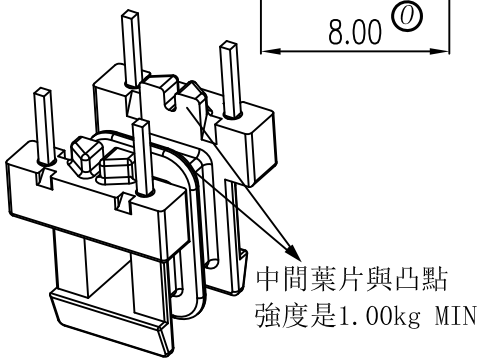

備註說明：

1. 材質：PM-9823
2. 強度要求：2.00kg MIN
3. 耐壓要求：4KV/1.5mA/1分鐘
4. 焊錫溫度：450° ±10° 3SEC
5. 拉力：焊前是1.00kg MIN,焊後是1.5kg MIN
6. 模具狀況：正式模
7. 最小壁厚是0.40mm

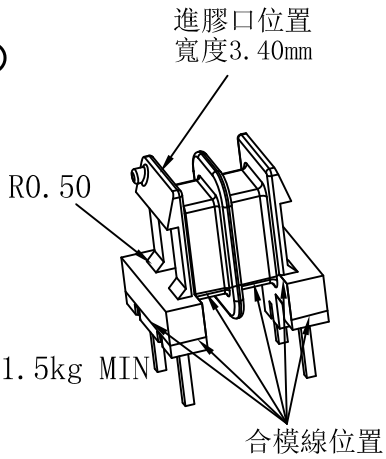

A	B	C	D	E	F	G	H	I	J	K	L	M	N	O	P	Q	R	S	T	U
5.60	1.00	2.70	5.00	1.00	9.70	5.80	4.75	1.10	PL	6.80	0.50	3.70	0.50	8.00	8.80	5.50	4.10	8.50	2.30	3.40
±0.1	±0.1	±0.1	±0.2	±0.1	±0.2	+0.05 -0.15	±0.2	±0.1	±0.2	±0.2	±0.05	±0.1	±0.1	±0.2	±0.2	±0.1	±0.1	±0.2	+0.1 -0.05	+0 -0.1

客户确认
签回

RoHS
HF

REV.	REVISION RECORD	DATE	REV	REVISION RECORD	DATE
01	BASE凸點加厚由0.60改為1.10呈三角形，線槽寬由0.40改為0.60	2017/11/28	03		
02	進膠口改凹下0.30mm	2018/01/22	04		

NAME	EE-8.3(4P)	MATERIAL	PM-9823	SCALE	3:1	ANGLE	±1°
DRAWING NO.	HX-0826	PIN MATERIAL	CP WIRE	UNIT	m/m	REV.	01

东莞市华欣塑胶制品有限公司
DONGGUAN HUAXIN PLASTIC MANUFACTURING PRODUCTS CO.,LTD.
TEL:0769-86388088 86388188 86388288 FAX:0769-86388111
http://www.hxbobbin.com E-Mail:hxbobbin@vip.163.com

TOLERANCE OF PIN DIA ±0.05

PIN TENSION LOAD kg MIN

UL REC.:94V0

TOLERANCE:0<L≤4:±0.1 4<L≤16:±0.2 16<L≤63:±0.3

DRAWN & DRAFTED BY	LIN HUA JING	CHECKED & APPROVED BY		DATE:	MAY 05 2017