记号	日期	修 改 记 录

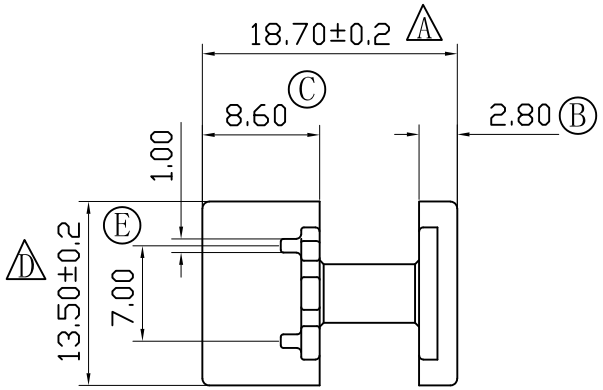

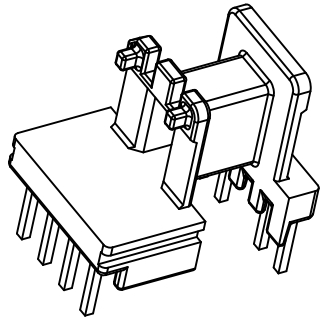

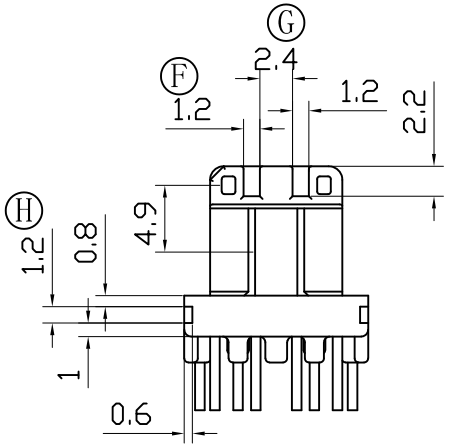

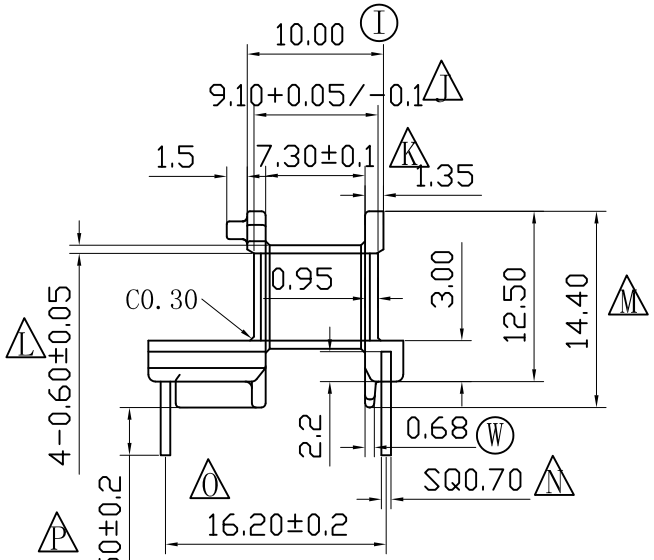

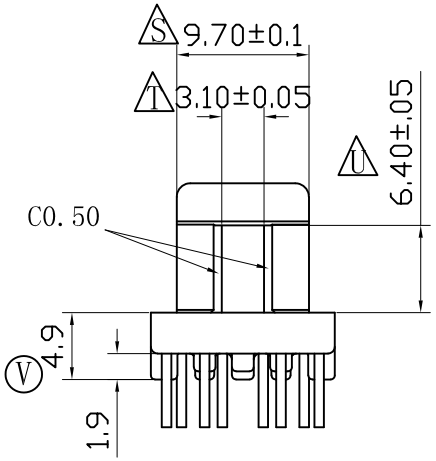

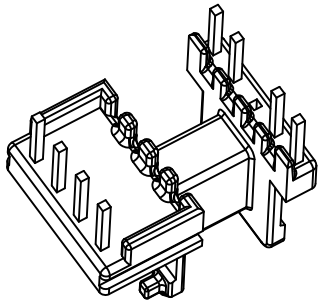

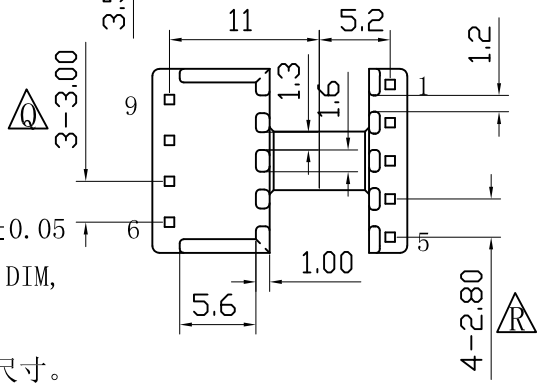

RoHS
HF

备註說明：

1. PART NO.: HX1329 量產模
2. MATERIAL: PM-9820 MUST MEET UL94V-0
3. COLOR: BLACK
4. CORE TYPE: EE-13
5. MATERIAL OF PIN : 3/4H CP WIRE, SQ0.70±0.05
6. DIMENSION MARK : A MAIN DIM., X SECOND DIM, OTHERWIRE ARE REFERENTIAL DIM..

标示的 A 为重要尺寸，标示的 X 为次要尺寸。

NAME	EE-13(9P)	MATERIAL	PM-9820	SCALE	1:1	ANGLE	±1°
DRAWING NO.	HX 1329	PIN MATERIAL	CP WIRE	UNIT	m/m	REV.	00

东莞市华欣塑胶制品有限公司
DONGGUAN HUAXIN PLASTIC MANUFACTURING PRODUCTS CO.,LTD.
TEL:0769-86388188 FAX:0769-86388111
E-Mail:hxbobbin@vip.163.com

TOLERANCE OF PIN PITCH ±0.20

PIN TENSION LOAD 1.5 kg MIN UL REC.:94V0

TOLERANCE: 0<L≤8:±0.1 8<L≤16:±0.15 16<L≤70:±0.2

DRAWN & DRAFTED BY	LIN HUA JING	CHECKED & APPROVED BY	LIN GUO PING	DATE:	MAR 27 2014