HX-0827

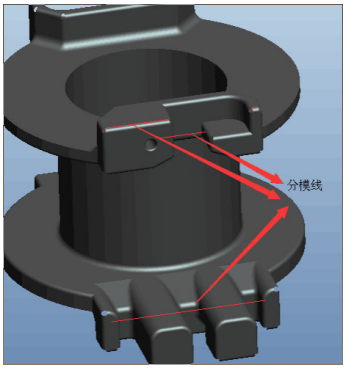

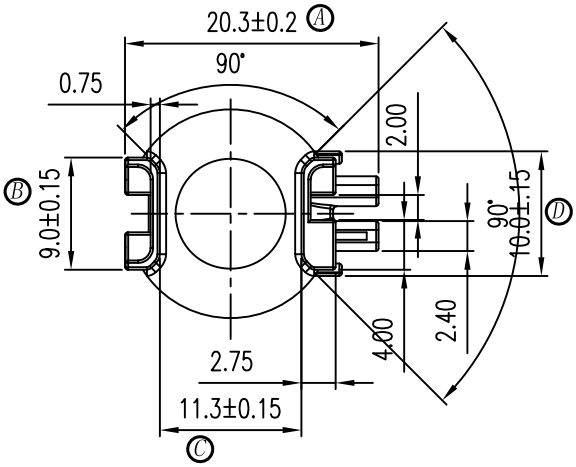

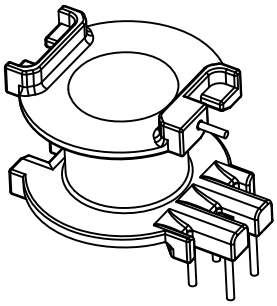

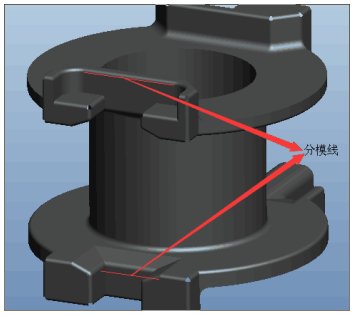

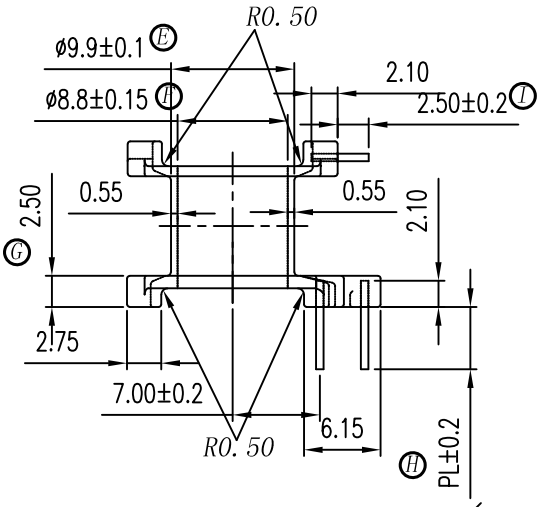

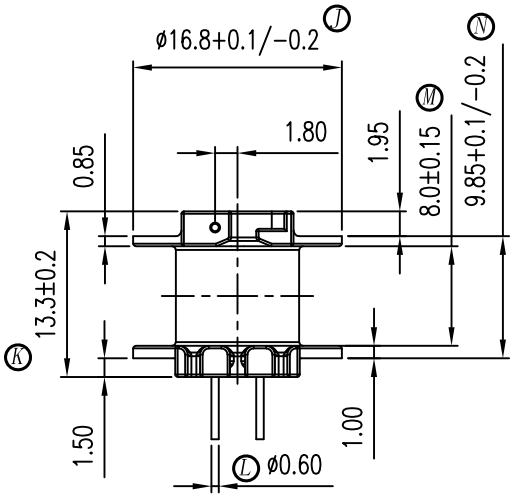

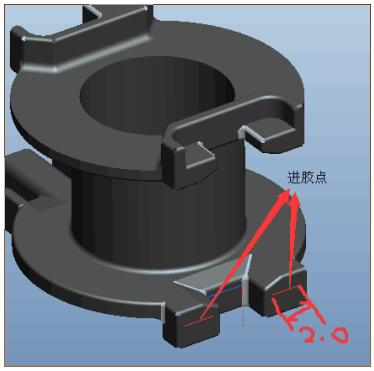

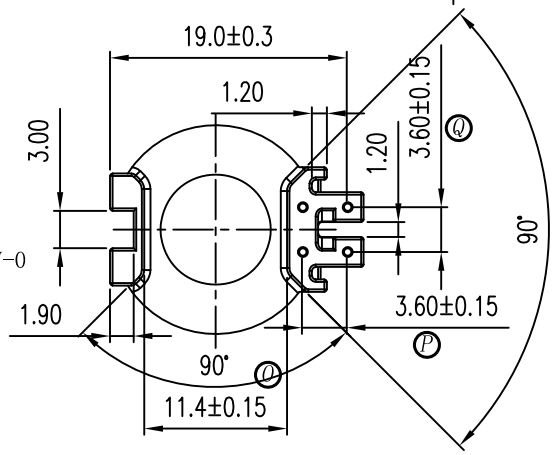

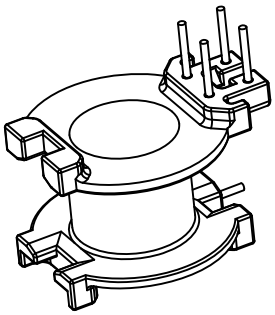

備註說明:

1. PART NO.: HX-0827
2. MATERIAL: PM-9630 MUST MEET UL94V-0
3. COLOR: BLACK
4. CORE TYPE: RM-8
5. 強度要求: 2.50kg MIN
6. 耐壓要求: 4KV/1.5mA/1分鐘
7. 焊錫後拉力: 1.50kg MIN
8. 模具狀況: 量產模

A	B	C	D	E	F	G	H	I	J	K	L	M	N	O	P	Q
20.30	9.00	11.30	10.00	9.90	8.80	2.50	PL	2.50	16.80	13.30	0.60	8.00	9.85	11.40	3.60	3.60
±0.2	±0.15	±0.15	±0.15	±0.1	±0.15	±0.1	±0.2	±0.2	+0.1 -0.2	±0.2	±0.05	±0.15	+0.1 -0.2	±0.15	±0.15	±0.15

客户确认	
签回	

RoHS HF

REV.	REVISION RECORD	DATE	REV	REVISION RECORD	DATE
01			03		
02			04		

NAME	RM-8 (5P)	MATERIAL	PM-9630	SCALE	1:1	ANGLE	±1°
DRAWING NO.	HX-0827	PIN MATERIAL	CP WIRE	UNIT	m/m	REV.	00

东莞市华欣塑胶制品有限公司
DONGGUAN HUAXIN PLASTIC MANUFACTURING PRODUCTS CO.,LTD.
TEL:0769-86388088 86388188 86388288 FAX:0769-86388111
http://www.hxbobbin.com E-Mail:hxbobbin@vip.163.com

TOLERANCE OF PIN DIA ±0.05

PIN TENSION LOAD kg MIN

UL REC.:94V0

TOLERANCE: 0<L≤4: ±0.1 4<L≤16: ±0.2 16<L≤63: ±0.3

DRAWN & DRAFTED BY	LIN HUA JING	CHECKED & APPROVED BY		DATE:	MAY 09 2017