HX-1036

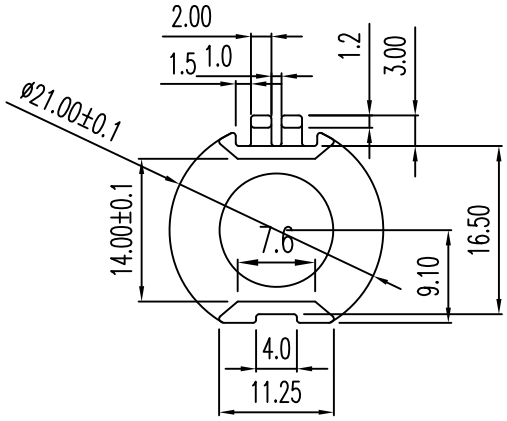

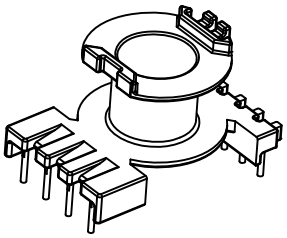

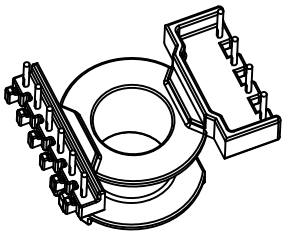

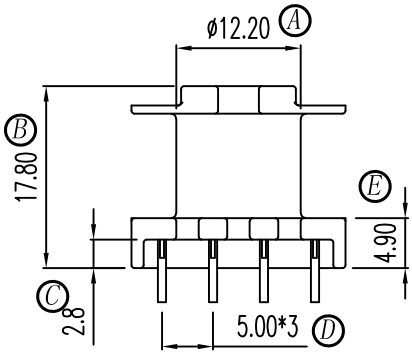

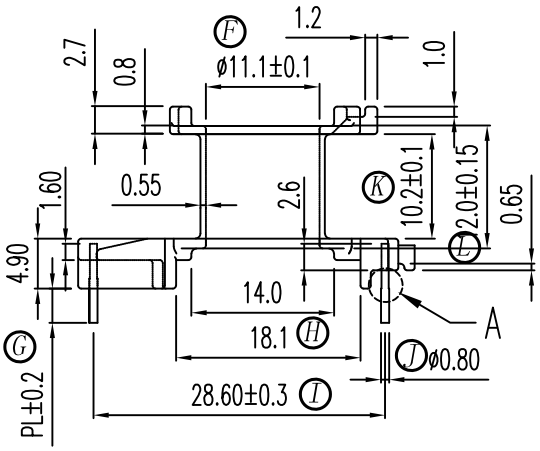

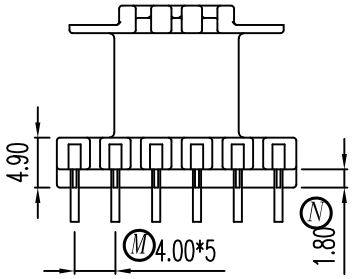

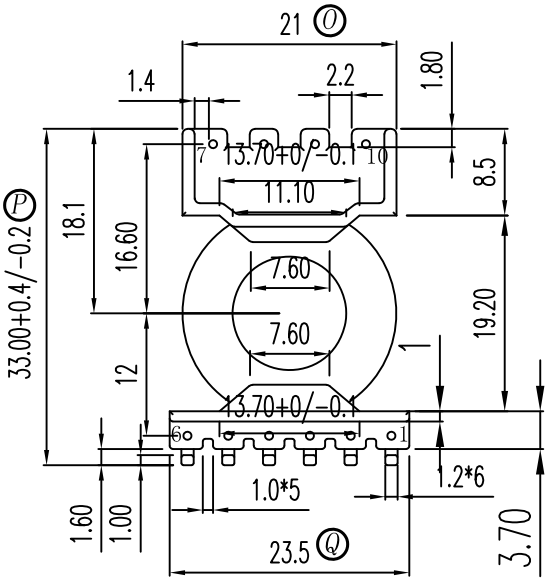

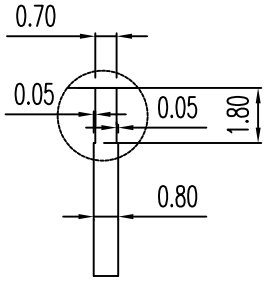

PIN咬花外露
DETAIL A(3:1)

備註說明：

1. 材質：PM-9630
2. 強度要求：1.80kg MIN
3. 耐壓要求：4KV/1.5mA/1分鐘
4. 焊錫溫度：450° ±10° 3SEC
5. 拉力：焊後拉力 1.53kg MIN
6. 模具狀況：量產模

客户确认签回	

RoHS HF

REV.	REVISION RECORD	DATE	REV	REVISION RECORD	DATE
01			03		
02			04		

NAME	RM-10(10P)	MATERIAL	PM-9630	SCALE	1:1	ANGLE	±1°
DRAWING NO.	HX-1036	PIN MATERIAL	CP WIRE	UNIT	m/m	REV.	00

东莞市华欣塑胶制品有限公司
DONGGUAN HUAXIN PLASTIC MANUFACTURING PRODUCTS CO.,LTD.
TEL:0769-86388088 86388188 86388288 FAX:0769-86388111
http://www.hxbobbin.com E-Mail:hxbobbin@vip.163.com

TOLERANCE OF PIN DIA ±0.05

[redacted]

UL REC.:94V0

TOLERANCE:0<L≤4:±0.1 4<L≤16:±0.2 16<L≤63:±0.3

DRAWN & DRAFTED BY	LIN HUA JING	CHECKED & APPROVED BY		DATE:	SEP 02 2015